Internal Use Only

http://biz.lgservice.com

MULTI V™ III

Outdoor Unit R410A

SERVICE MANUAL

(Exploded View)

MODEL : ARUN Series

CAUTION

Before Servicing the unit, read the safety precautions in General SVC manual.
Only for authorized service personnel.

ARUN/ARUV Series

1. Specification

■ 208/230V

Heat Pump(60Hz)

HP			8	10	12
Model Name	Combination Unit		**ARUN072BT3**	**ARUN096BT3**	**ARUN121BT3**
	Independent Unit				
Capacity	Cooling Nominal	Btu/h	72,000	96,000	120,000
	Cooling Rated		69,000	92,000	114,000
	Cooling Nominal	kW	21.1	28.0	35.2
	Cooling Nominal	kcal/h	18,100	24,100	30,300
	Heating Nominal	Btu/h	81,000	108,000	135,000
	Heating Rated		77,000	103,000	129,000
	Heating Nominal	kW	23.7	31.6	39.6
	Heating Nominal	kcal/h	20,400	27,200	34,000
Casing Color			Warm Gray Morning Gray	Warm Gray Morning Gray	Warm Gray Morning Gray
Heat Exchanger			Gold fin	Gold fin	Gold fin
Compressor	Type		HSS DC Scroll	HSS DC Scroll	HSS DC Scroll
	Piston Displacement	cm^3/rev	50.2	50.2 + 66.49	50.2 + 66.49
	Number of Revolution(@60Hz)	R.P.M	3,600	3,600 + 3,488	3,600 + 3,488
	Motor Output x Number	W	5,143 x 1	(5,143 + 4,950) x 1	(5,143 + 4,950) x 1
	Starting Method		Inverter	Inverter, Direct On Line	Inverter, Direct On Line
	Inverter operation range	Hz	20 ~ 120	20 ~ 120	20 ~ 120
	Oil Type		FVC68D(PVE)	FVC68D(PVE)	FVC68D(PVE)
	Oil Charge	cc	3500	5500	5500
Fan	Type		Propeller fan	Propeller fan	Propeller fan
	Motor Output x Number	W	750 x 1	600 x 2	600 x 2
	Air Flow Rate(High)	CMM	180	210	240
		cfm	6,300	7,400	8,500
	Drive		DC INVERTER	DC INVERTER	DC INVERTER
	Discharge	Side / Top	TOP	TOP	TOP
Pipe Connctions	Liquid Pipes	mm(inch)	9.52(3/8)	9.52(3/8)	12.7(1/2)
	Gas Pipes	mm(inch)	19.05(3/4)	22.2(7/8)	28.58(1-1/8)
Dimensions(W x H x D)		mm	(920 × 1,680 × 760) × 1	(1,240 × 1,680 × 760) × 1	(1,240 × 1,680 × 760) × 1
		inch	(36.2 × 66.1 × 29.9) × 1	(48.8 × 66.1 × 29.9) × 1	(48.8 × 66.1 × 29.9) × 1
Net Weight		kg	190 × 1	280 × 1	280 × 1
		lbs	418 × 1	617 × 1	617 × 1
Protection Devices		High pressure protection	High pressure sensor, High pressure switch	High pressure sensor, High pressure switch	High pressure sensor, High pressure switch
		Comperssor/ Fan	Over-heat protection/ Fan driver overload protector	Over-heat protection/ Fan driver overload protector	Over-heat protection/ Fan driver overload protector
		Inverter	Over-heat protection, Over-current protection	Over-heat protection, Over-current protection	Over-heat protection, Over-current protection
Communication Cable		mm^2(VCTF-SB)	1.0 ~ 1.5 × 2C	1.0 ~ 1.5 × 2C	1.0 ~ 1.5 × 2C
Refigerant	Refigerant name		R410A	R410A	R410A
	Control		EEV	EEV	EEV
Power Supply		Ø , V, Hz	3, 208/230, 60	3, 208/230, 60	3, 208/230, 60

Notes:
1. Capacities are based on the following conditions:
   Cooling: - Indoor temp.: 80°FDB/67°FWB
   - Outdoor temp.: 95°FDB
   Heating: - Indoor temp.: 70°FDB
   - Outdoor temp.: 47°FDB/43°FWB
   Piping Length - Interconnecting Piping Length 7.5m(25ft)
   - Level Difference of Zero
2. Capacities are net capacities
3. EEV : Electronic Expansion Valve
4. HSS : High Pressure side shell
5. Wiring cable size must comply with the applicable local and national code.
6. Due to our policy of innovation some specifications may be changed without prior notification

#

	Inv comp.	Const. comp.
Piston Displacement	50.2	66.49
Number of Revolution	3,600	3,488
Motor Output	5,143	4,950

Conversion Formula
RT = kW x 0.284
kcal/h = kW x 860
Btu/h = kW x 3412
CFM = m^3/min x 35.3

Heat Pump(60Hz)

HP			14	18	20
Model Name	Combination Unit		**ARUN144BT3**	**ARUN168BT3**	**ARUN192BT3**
	Independent Unit			**ARUN072BT3**	**ARUN072BT3**
				ARUN096BT3	**ARUN121BT3**
Capacity	Cooling Nominal	Btu/h	144,000	168,000	192,000
	Cooling Rated		138,000	160,000	184,000
	Cooling Nominal	kW	42.2	49.1	56.3
	Cooling Nominal	kcal/h	36,300	42,200	48,400
	Heating Nominal	Btu/h	162,000	189,000	216,000
	Heating Rated		154,000	180,000	206,000
	Heating Nominal	kW	47.5	55.3	63.3
	Heating Nominal	kcal/h	40,800	47,600	54,400
Casing Color			Warm Gray Morning Gray	Warm Gray Morning Gray	Warm Gray Morning Gray
Heat Exchanger			Gold fin	Gold fin	Gold fin
Compressor	Type		HSS DC Scroll	HSS DC Scroll	HSS DC Scroll
	Piston Displacement	cm^3/rev	50.2 + 66.49	50.2 + (50.2 + 66.49)	50.2 + (50.2 + 66.49)
	Number of Revolution(@60Hz)	R.P.M	3,600 + 3,488	3,600 + (3,600 + 3,488)	3,600 + (3,600 + 3,488)
	Motor Output x Number	W	(5,143 + 4,950) x 1	5,143 + (5,143 + 4,950) x 1	5,143 + (5,143 + 4,950) x 1
	Starting Method		Inverter, Direct On Line	Inverter, Direct On Line	Inverter, Direct On Line
	Inverter operation range	Hz	20 ~ 120	20 ~ 120	20 ~ 120
	Oil Type		FVC68D(PVE)	FVC68D(PVE)	FVC68D(PVE)
	Oil Charge	cc	5,500	9,000	9,000
Fan	Type		Propeller fan	Propeller fan	Propeller fan
	Motor Output x Number	W	600 x 2	750 + (600 x 2)	750 + (600 x 2)
	Air Flow Rate(High)	CMM	250	390	420
		cfm	8,800	13,700	14,800
	Drive		DC INVERTER	DC INVERTER	DC INVERTER
	Discharge	Side / Top	TOP	TOP	TOP
Pipe Connctions	Liquid Pipes	mm(inch)	12.7(1/2)	12.7(1/2)	15.88(5/8)
	Gas Pipes	mm(inch)	28.58(1-1/8)	28.58(1-1/8)	28.58(1-1/8)
Dimensions(W x H x D)		mm	(1,240 x 1,680 x 760) x 1	(920 x 1,680 x 760) x 1 (1,240 x 1,680 x 760) x 1	(920 x 1,680 x 760) x 1 (1,240 x 1,680 x 760) x 1
		inch	(48.8 x 66.1 x 29.9) x 1	(36.2 x 66.1 x 29.9) x 1 (48.8 x 66.1 x 29.9) x 1	(36.2 x 66.1 x 29.9) x 1 (48.8 x 66.1 x 29.9) x 1
Net Weight		kg	280 x 1	190 x 1 + 280 x 1	190 x 1 + 280 x 1
		lbs	617 x 1	418 x 1 + 617 x 1	418 x 1 + 617 x 1
Protection Devices		High pressure protection	High pressure sensor, High pressure switch	High pressure sensor, High pressure switch	High pressure sensor, High pressure switch
		Comperssor/ Fan	Over-heat protection/ Fan driver overload protector	Over-heat protection/ Fan driver overload protector	Over-heat protection/ Fan driver overload protector
		Inverter	Over-heat protection, Over-current protection	Over-heat protection, Over-current protection	Over-heat protection, Over-current protection
Communication Cable		mm^2(VCTF-SB)	1.0 ~ 1.5 x 2C	1.0 ~ 1.5 x 2C	1.0 ~ 1.5 x 2C
Refigerant	Refigerant name		R410A	R410A	R410A
	Control		EEV	EEV	EEV
Power Supply		Ø , V, Hz	3, 208/230, 60	3, 208/230, 60	3, 208/230, 60

Notes:

1. Capacities are based on the following conditions:
   Cooling: - Indoor temp.: 80°FDB/67°FWB
   - Outdoor temp.: 95°FDB
   Heating: - Indoor temp.: 70°FDB
   - Outdoor temp.: 47°FDB/43°FWB
   Piping Length - Interconnecting Piping Length 7.5m(25ft)
   - Level Difference of Zero
2. Capacities are net capacities
3. EEV : Electronic Expansion Valve
4. HSS : High Pressure side shell
5. Wiring cable size must comply with the applicable local and national code.
6. Due to our policy of innovation some specifications may be changed without prior notification

#

	Inv comp.	Const. comp.
Piston Displacement	50.2	66.49
Number of Revolution	3,600	3,488
Motor Output	5,143	4,950

Conversion Formula
RT = kW x 0.284
kcal/h = kW x 860
Btu/h = kW x 3412
CFM = m^3/min x 35.3

Heat Pump(60Hz)

HP			22	24	26
Model Name	Combination Unit		**ARUN216BT3**	**ARUN240BT3**	**ARUN264BT3**
	Independent Unit		**ARUN072BT3**	**ARUN096BT3**	**ARUN121BT3**
			ARUN144BT3	**ARUN144BT3**	**ARUN144BT3**
Capacity	Cooling Nominal	Btu/h	216,000	240,000	264,000
	Cooling Rated		206,000	228,000	250,000
	Cooling Nominal	kW	63.2	70.4	77.1
	Cooling Nominal	kcal/h	54,400	60,600	66,300
	Heating Nominal	Btu/h	243,000	270,000	297,000
	Heating Rated		230,000	256,000	282,000
	Heating Nominal	kW	71.2	79.2	86.9
	Heating Nominal	kcal/h	61,200	68,000	74,800
Casing Color			Warm Gray Morning Gray	Warm Gray Morning Gray	Warm Gray Morning Gray
Heat Exchanger			Gold fin	Gold fin	Gold fin
Compressor	Type		HSS DC Scroll	HSS DC Scroll	HSS DC Scroll
	Piston Displacement	cm^3/rev	50.2 + (50.2 + 66.49)	(50.2 + 66.49) x 2	(50.2 + 66.49) x 2
	Number of Revolution(@60Hz)	R.P.M	3,600 + (3,600 + 3,488)	(3,600 + 3,488) x 2	(3,600 + 3,488) x 2
	Motor Output x Number	W	5,143 + (5,143 + 4,950) x 1	(5,143 + 4,950) x 2	(5,143 + 4,950) x 2
	Starting Method		Inverter, Direct On Line	Inverter, Direct On Line	Inverter, Direct On Line
	Inverter operation range	Hz	20 ~ 120	20 ~ 120	20 ~ 120
	Oil Type		FVC68D(PVE)	FVC68D(PVE)	FVC68D(PVE)
	Oil Charge	cc	11,000	11,000	11,000
Fan	Type		Propeller fan	Propeller fan	Propeller fan
	Motor Output x Number	W	750 + (600 x 2)	(600 x 2) x 2	(600 x 2) x 2
	Air Flow Rate(High)	CMM	430	460	490
		cfm	15,100	16,200	17,300
	Drive		DC INVERTER	DC INVERTER	DC INVERTER
	Discharge	Side / Top	TOP	TOP	TOP
Pipe Connctions	Liquid Pipes	mm(inch)	15.88(5/8)	15.88(5/8)	15.88(5/8)
	Gas Pipes	mm(inch)	28.58(1-1/8)	28.58(1-1/8)	34.9(1-3/8)
Dimensions(W x H x D)		mm	(920 x 1,680 x 760) x 1 (1,240 x 1,680 x 760) x 1	(1,240 x 1,680 x 760) x 2	(1,240 x 1,680 x 760) x 2
		inch	(36.2 x 66.1 x 29.9) x 1 (48.8 x 66.1 x 29.9) x 1	(48.8 x 66.1 x 29.9) x 2	(48.8 x 66.1 x 29.9) x 2
Net Weight		kg	190 x 1 + 280 x 1	280 x 2	280 x 2
		lbs	418 x 1 + 617 x 1	617 x 2	617 x 2
Protection Devices		High pressure protection	High pressure sensor, High pressure switch	High pressure sensor, High pressure switch	High pressure sensor, High pressure switch
		Comperssor/ Fan	Over-heat protection/ Fan driver overload protector	Over-heat protection/ Fan driver overload protector	Over-heat protection/ Fan driver overload protector
		Inverter	Over-heat protection, Over-current protection	Over-heat protection, Over-current protection	Over-heat protection, Over-current protection
Communication Cable		mm^2(VCTF-SB)	1.0 ~ 1.5 x 2C	1.0 ~ 1.5 x 2C	1.0 ~ 1.5 x 2C
Refigerant	Refigerant name		R410A	R410A	R410A
	Control		EEV	EEV	EEV
Power Supply		Ø , V, Hz	3, 208/230, 60	3, 208/230, 60	3, 208/230, 60

Notes:
1. Capacities are based on the following conditions:
   Cooling: - Indoor temp.: 80°FDB/67°FWB
   - Outdoor temp.: 95°FDB
   Heating: - Indoor temp.: 70°FDB
   - Outdoor temp.: 47°FDB/43°FWB
   Piping Length - Interconnecting Piping Length 7.5m(25ft)
   - Level Difference of Zero
2. Capacities are net capacities
3. EEV : Electronic Expansion Valve
4. HSS : High Pressure side shell
5. Wiring cable size must comply with the applicable local and national code.
6. Due to our policy of innovation some specifications may be changed without prior notification

#

	Inv comp.	Const. comp.
Piston Displacement	50.2	66.49
Number of Revolution	3,600	3,488
Motor Output	5,143	4,950

Conversion Formula
RT = kW x 0.284
kcal/h = kW x 860
Btu/h = kW x 3412
CFM = m^3/min x 35.3

Heat Pump(60Hz)

HP			28	32	34
Model Name	Combination Unit		**ARUN288BT3**	**ARUN312BT3**	**ARUN336BT3**
	Independent Unit		**ARUN144BT3**	**ARUN072BT3**	**ARUN072BT3**
			ARUN144BT3	**ARUN096BT3**	**ARUN121BT3**
				ARUN144BT3	**ARUN144BT3**
Capacity	Cooling Nominal	Btu/h	288,000	312,000	336,000
	Cooling Rated		274,000	296,000	320,000
	Cooling Nominal	kW	84.3	91.5	98.4
	Cooling Nominal	kcal/h	72,500	78,700	84,700
	Heating Nominal	Btu/h	324,000	351,000	378,000
	Heating Rated		308,000	334,000	361,000
	Heating Nominal	kW	94.9	102.9	110.8
	Heating Nominal	kcal/h	81,600	88,400	95,200
Casing Color			Warm Gray Morning Gray	Warm Gray Morning Gray	Warm Gray Morning Gray
Heat Exchanger			Gold fin	Gold fin	Gold fin
Compressor	Type		HSS DC Scroll	HSS DC Scroll	HSS DC Scroll
	Piston Displacement	cm^3/rev	(50.2 + 66.49) x 2	50.2 + (50.2 + 66.49) x 2	50.2 + (50.2 + 66.49) x 2
	Number of Revolution(@60Hz)	R.P.M	(3,600 + 3,488) x 2	3,600 + (3,600 + 3,488) x 2	3,600 + (3,600 + 3,488) x 2
	Motor Output x Number	W	(5,143 + 4,950) x 2	5,143 + (5,143 + 4,950) x 2	5,143 + (5,143 + 4,950) x 2
	Starting Method		Inverter, Direct On Line	Inverter, Direct On Line	Inverter, Direct On Line
	Inverter operation range	Hz	20 ~ 120	20 ~ 120	20 ~ 120
	Oil Type		FVC68D(PVE)	FVC68D(PVE)	FVC68D(PVE)
	Oil Charge	cc	11,000	14,500	14,500
Fan	Type		Propeller fan	Propeller fan	Propeller fan
	Motor Output x Number	W	(600 x 2) x 2	750 + (600 x 2) x 2	750 + (600 x 2) x 2
	Air Flow Rate(High)	CMM	500	640	670
		cfm	17,600	22,500	23,600
	Drive		DC INVERTER	DC INVERTER	DC INVERTER
	Discharge	Side / Top	TOP	TOP	TOP
Pipe Connctions	Liquid Pipes	mm(inch)	19.05(3/4)	19.05(3/4)	19.05(3/4)
	Gas Pipes	mm(inch)	34.9(1-3/8)	34.9(1-3/8)	34.9(1-3/8)
Dimensions(W x H x D)		mm	(1,240 x 1,680 x 760) x 2	(920 x 1,680 x 760) x 1 (1,240 x 1,680 x 760) x 2	(920 x 1,680 x 760) x 1 (1,240 x 1,680 x 760) x 2
		inch	(48.8 x 66.1 x 29.9) x 2	(36.2 x 66.1 x 29.9) x 1 (48.8 x 66.1 x 29.9) x 2	(36.2 x 66.1 x 29.9) x 1 (48.8 x 66.1 x 29.9) x 2
Net Weight		kg	280 x 2	190 x 1 + 280 x 2	190 x 1 + 280 x 2
		lbs	617 x 2	418 x 1 + 617 x 2	418 x 1 + 617 x 2
Protection Devices		High pressure protection	High pressure sensor, High pressure switch	High pressure sensor, High pressure switch	High pressure sensor, High pressure switch
		Comperssor/ Fan	Over-heat protection/ Fan driver overload protector	Over-heat protection/ Fan driver overload protector	Over-heat protection/ Fan driver overload protector
		Inverter	Over-heat protection, Over-current protection	Over-heat protection, Over-current protection	Over-heat protection, Over-current protection
Communication Cable		mm^2(VCTF-SB)	1.0 ~ 1.5 x 2C	1.0 ~ 1.5 x 2C	1.0 ~ 1.5 x 2C
Refigerant	Refigerant name		R410A	R410A	R410A
	Control		EEV	EEV	EEV
Power Supply		Ø , V, Hz	3, 208/230, 60	3, 208/230, 60	3, 208/230, 60

Notes:

1. Capacities are based on the following conditions:
   Cooling: - Indoor temp.: 80°FDB/67°FWB
   - Outdoor temp.: 95°FDB
   Heating: - Indoor temp.: 70°FDB
   - Outdoor temp.: 47°FDB/43°FWB
   Piping Length - Interconnecting Piping Length 7.5m(25ft)
   - Level Difference of Zero
2. Capacities are net capacities
3. EEV : Electronic Expansion Valve
4. HSS : High Pressure side shell
5. Wiring cable size must comply with the applicable local and national code.
6. Due to our policy of innovation some specifications may be changed without prior notification

#

	Inv comp.	Const. comp.
Piston Displacement	50.2	66.49
Number of Revolution	3,600	3,488
Motor Output	5,143	4,950

Conversion Formula
RT = kW x 0.284
kcal/h = kW x 860
Btu/h = kW x 3412
CFM = m^3/min x 35.3

Heat Pump(60Hz)

HP			36	38	40
Model Name	Combination Unit		**ARUN360BT3**	**ARUN384BT3**	**ARUN408BT3**
	Independent Unit		**ARUN072BT3**	**ARUN096BT3**	**ARUN121BT3**
			ARUN144BT3	**ARUN144BT3**	**ARUN144BT3**
			ARUN144BT3	**ARUN144BT3**	**ARUN144BT3**
Capacity	Cooling Nominal	Btu/h	360,000	384,000	408,000
	Cooling Rated		342,000	366,000	390,000
	Cooling Nominal	kW	105.6	112.6	119.6
	Cooling Nominal	kcal/h	90,900	96,900	102,900
	Heating Nominal	Btu/h	405,000	432,000	459,000
	Heating Rated		387,000	412,000	437,000
	Heating Nominal	kW	118.8	126.7	134.6
	Heating Nominal	kcal/h	102,000	108,800	115,600
Casing Color			Warm Gray Morning Gray	Warm Gray Morning Gray	Warm Gray Morning Gray
Heat Exchanger			Gold fin	Gold fin	Gold fin
Compressor	Type		HSS DC Scroll	HSS DC Scroll	HSS DC Scroll
	Piston Displacement	cm^3/rev	50.2 + (50.2 + 66.49) x 2	(50.2 + 66.49) x 3	(50.2 + 66.49) x 3
	Number of Revolution(@60Hz)	R.P.M	3,600 + (3,600 + 3,488) x 2	(3,600 + 3,488) x 3	(3,600 + 3,488) x 3
	Motor Output x Number	W	5,143 + (5,143 + 4,950) x 2	(5,143 + 4,950) x 3	(5,143 + 4,950) x 3
	Starting Method		Inverter, Direct On Line	Inverter, Direct On Line	Inverter, Direct On Line
	Inverter operation range	Hz	20 ~ 120	20 ~ 120	20 ~ 120
	Oil Type		FVC68D(PVE)	FVC68D(PVE)	FVC68D(PVE)
	Oil Charge	cc	14,500	16,500	16,500
Fan	Type		Propeller fan	Propeller fan	Propeller fan
	Motor Output x Number	W	750 + (600 x 2) x 2	(600 x 2) x 3	(600 x 2) x 3
	Air Flow Rate(High)	CMM	680	710	740
		cfm	23,900	25,000	26,100
	Drive		DC INVERTER	DC INVERTER	DC INVERTER
	Discharge	Side / Top	TOP	TOP	TOP
Pipe Connctions	Liquid Pipes	mm(inch)	19.05(3/4)	19.05(3/4)	19.05(3/4)
	Gas Pipes	mm(inch)	34.9(1-3/8)	34.9(1-3/8)	41.3(1-5/8)
Dimensions(W x H x D)		mm	(920 x 1,680 x 760) x 1 (1,240 x 1,680 x 760) x 2	(1,240 x 1,680 x 760) x 3	(1,240 x 1,680 x 760) x 3
		inch	(36.2 x 66.1 x 29.9) x 1 (48.8 x 66.1 x 29.9) x 2	(48.8 x 66.1 x 29.9) x 3	(48.8 x 66.1 x 29.9) x 3
Net Weight		kg	190 x 1 + 280 x 2	280 x 3	280 x 3
		lbs	418 x 1 + 617 x 2	617 x 3	617 x 3
Protection Devices		High pressure protection	High pressure sensor, High pressure switch	High pressure sensor, High pressure switch	High pressure sensor, High pressure switch
		Comperssor/ Fan	Over-heat protection/ Fan driver overload protector	Over-heat protection/ Fan driver overload protector	Over-heat protection/ Fan driver overload protector
		Inverter	Over-heat protection, Over-current protection	Over-heat protection, Over-current protection	Over-heat protection, Over-current protection
Communication Cable		mm^2(VCTF-SB)	1.0 ~ 1.5 x 2C	1.0 ~ 1.5 x 2C	1.0 ~ 1.5 x 2C
Refigerant	Refigerant name		R410A	R410A	R410A
	Control		EEV	EEV	EEV
Power Supply		Ø , V, Hz	3, 208/230, 60	3, 208/230, 60	3, 208/230, 60

Notes:

1. Capacities are based on the following conditions:
   Cooling: - Indoor temp.: 80°FDB/67°FWB
   - Outdoor temp.: 95°FDB
   Heating: - Indoor temp.: 70°FDB
   - Outdoor temp.: 47°FDB/43°FWB
   Piping Length - Interconnecting Piping Length 7.5m(25ft)
   - Level Difference of Zero
2. Capacities are net capacities
3. EEV : Electronic Expansion Valve
4. HSS : High Pressure side shell
5. Wiring cable size must comply with the applicable local and national code.
6. Due to our policy of innovation some specifications may be changed without prior notification

#

	Inv comp.	Const. comp.
Piston Displacement	50.2	66.49
Number of Revolution	3,600	3,488
Motor Output	5,143	4,950

Conversion Formula
RT = kW x 0.284
kcal/h = kW x 860
Btu/h = kW x 3412
CFM = m^3/min x 35.3

Heat Pump(60Hz)

HP			42
Model Name	Combination Unit		ARUN432BT3
	Independent Unit		ARUN144BT3
			ARUN144BT3
			ARUN144BT3
Capacity	Cooling Nominal	Btu/h	432,000
	Cooling Rated		414,000
	Cooling Nominal	kW	126.6
	Cooling Nominal	kcal/h	108,900
	Heating Nominal	Btu/h	486,000
	Heating Rated		462,000
	Heating Nominal	kW	142.5
	Heating Nominal	kcal/h	122,400
Casing Color			Warm Gray Morning Gray
Heat Exchanger			Gold fin
Compressor	Type		HSS DC Scroll
	Piston Displacement	cm^3/rev	(50.2 + 66.49) x 3
	Number of Revolution(@60Hz)	R.P.M	(3,600 + 3,488) x 3
	Motor Output x Number	W	(5,143 + 4,950) x 3
	Starting Method		Inverter, Direct On Line
	Inverter operation range	Hz	20 ~ 120
	Oil Type		FVC68D(PVE)
	Oil Charge	cc	16,500
Fan	Type		Propeller fan
	Motor Output x Number	W	(600 x 2) x 3
	Air Flow Rate(High)	CMM	750
		cfm	26,400
	Drive		DC INVERTER
	Discharge	Side / Top	TOP
Pipe Connctions	Liquid Pipes	mm(inch)	19.05(3/4)
	Gas Pipes	mm(inch)	41.3(1-5/8)
Dimensions(W x H x D)		mm	(1,240 × 1,680 × 760) × 3
		inch	(48.8 × 66.1 × 29.9) × 3
Net Weight		kg	280 × 3
		lbs	617 × 3
Protection Devices		High pressure protection	High pressure sensor, High pressure switch
		Comperssor/ Fan	Over-heat protection/ Fan driver overload protector
		Inverter	Over-heat protection, Over-current protection
Communication Cable		mm^2(VCTF-SB)	1.0 ~ 1.5 × 2C
Refigerant	Refigerant name		R410A
	Control		EEV
Power Supply		Ø , V, Hz	3, 208/230, 60

Notes:

1. Capacities are based on the following conditions:
   Cooling: - Indoor temp.: 80°FDB/67°FWB
   - Outdoor temp.: 95°FDB
   Heating: - Indoor temp.: 70°FDB
   - Outdoor temp.: 47°FDB/43°FWB
   Piping Length - Interconnecting Piping Length 7.5m(25ft)
   - Level Difference of Zero
2. Capacities are net capacities
3. EEV : Electronic Expansion Valve
4. HSS : High Pressure side shell
5. Wiring cable size must comply with the applicable local and national code.
6. Due to our policy of innovation some specifications may be changed without prior notification

#

	Inv comp.	Const. comp.
Piston Displacement	50.2	66.49
Number of Revolution	3,600	3,488
Motor Output	5,143	4,950

Conversion Formula
RT = kW x 0.284
kcal/h = kW x 860
Btu/h = kW x 3412
CFM = m^3/min x 35.3

■ 460V

Heat Pump(60Hz)

HP			8	10	12
Model Name	Combination Unit		**ARUN072DT3**	**ARUN096DT3**	**ARUN121DT3**
	Independent Unit				
Capacity	Cooling Nominal	Btu/h	72,000	96,000	120,000
	Cooling Rated		69,000	92,000	114,000
	Cooling Nominal	kW	21.1	28.0	35.2
	Cooling Nominal	kcal/h	18,100	24,100	30,300
	Heating Nominal	Btu/h	81,000	108,000	135,000
	Heating Rated		77,000	103,000	129,000
	Heating Nominal	kW	23.7	31.6	39.6
	Heating Nominal	kcal/h	20,400	27,200	34,000
Casing Color			Warm Gray Morning Gray	Warm Gray Morning Gray	Warm Gray Morning Gray
Heat Exchanger			Gold fin	Gold fin	Gold fin
Compressor	Type		HSS DC Scroll	HSS DC Scroll	HSS DC Scroll
	Piston Displacement	cm^3/rev	50.2	50.2 + 66.49	50.2 + 66.49
	Number of Revolution(@60Hz)	R.P.M	3,600	3,600 + 3,488	3,600 + 3,488
	Motor Output x Number	W	5,143 x 1	(5,143 + 4,950) x 1	(5,143 + 4,950) x 1
	Starting Method		Inverter	Inverter, Direct On Line	Inverter, Direct On Line
	Inverter operation range	Hz	20 ~ 120	20 ~ 120	20 ~ 120
	Oil Type		FVC68D(PVE)	FVC68D(PVE)	FVC68D(PVE)
	Oil Charge	cc	3,500	5,500	5,500
Fan	Type		Propeller fan	Propeller fan	Propeller fan
	Motor Output x Number	W	750 x 1	600 x 2	600 x 2
	Air Flow Rate(High)	CMM	180	210	240
		cfm	6,300	7,400	8,500
	Drive		DC INVERTER	DC INVERTER	DC INVERTER
	Discharge	Side / Top	TOP	TOP	TOP
Pipe Connctions	Liquid Pipes	mm(inch)	9.52(3/8)	9.52(3/8)	12.7(1/2)
	Gas Pipes	mm(inch)	19.05(3/4)	22.2(7/8)	28.58(1-1/8)
Dimensions(W x H x D)		mm	(920 x 1,680 x 760) x 1	(1,240 x 1,680 x 760) x 1	(1,240 x 1,680 x 760) x 1
		inch	(36.2 x 66.1 x 29.9) x 1	(48.8 x 66.1 x 29.9) x 1	(48.8 x 66.1 x 29.9) x 1
Net Weight		kg	190 x 1	270 x 1	270 x 1
		lbs	418 x 1	594 x 1	594 x 1
Protection Devices		High pressure protection	High pressure sensor, High pressure switch	High pressure sensor, High pressure switch	High pressure sensor, High pressure switch
		Comperssor/ Fan	Over-heat protection/ Fan driver overload protector	Over-heat protection/ Fan driver overload protector	Over-heat protection/ Fan driver overload protector
		Inverter	Over-heat protection, Over-current protection	Over-heat protection, Over-current protection	Over-heat protection, Over-current protection
Communication Cable		mm^2(VCTF-SB)	1.0 ~ 1.5 x 2C	1.0 ~ 1.5 x 2C	1.0 ~ 1.5 x 2C
Refigerant	Refigerant name		R410A	R410A	R410A
	Control		EEV	EEV	EEV
Power Supply		Ø , V, Hz	3, 460, 60	3, 460, 60	3, 460, 60

Notes:

1. Capacities are based on the following conditions:
   Cooling: - Indoor temp.: 80°FDB/67°FWB
   - Outdoor temp.: 95°FDB
   Heating: - Indoor temp.: 70°FDB
   - Outdoor temp.: 47°FDB/43°FWB
   Piping Length - Interconnecting Piping Length 7.5m(25ft)
   - Level Difference of Zero
2. Capacities are net capacities
3. EEV : Electronic Expansion Valve
4. HSS : High Pressure side shell
5. Wiring cable size must comply with the applicable local and national code.
6. Due to our policy of innovation some specifications may be changed without prior notification

#

	Inv comp.	Const. comp.
Piston Displacement	50.2	66.49
Number of Revolution	3,600	3,488
Motor Output	5,143	4,950

Conversion Formula
RT = kW x 0.284
kcal/h = kW x 860
Btu/h = kW x 3412
CFM = m^3/min x 35.3

Heat Pump(60Hz)

HP			14	18	20
Model Name	Combination Unit		**ARUN144DT3**	**ARUN168DT3**	**ARUN192DT3**
	Independent Unit			**ARUN072DT3**	**ARUN072DT3**
				ARUN096DT3	**ARUN121DT3**
Capacity	Cooling Nominal	Btu/h	144,000	168,000	192,000
	Cooling Rated		138,000	160,000	184,000
	Cooling Nominal	kW	42.2	49.1	56.3
	Cooling Nominal	kcal/h	36,300	42,200	48,400
	Heating Nominal	Btu/h	162,000	189,000	216,000
	Heating Rated		154,000	180,000	206,000
	Heating Nominal	kW	47.5	55.3	63.3
	Heating Nominal	kcal/h	40,800	47,600	54,400
Casing Color			Warm Gray Morning Gray	Warm Gray Morning Gray	Warm Gray Morning Gray
Heat Exchanger			Gold fin	Gold fin	Gold fin
Compressor	Type		HSS DC Scroll	HSS DC Scroll	HSS DC Scroll
	Piston Displacement	cm^3/rev	50.2 + 66.49	50.2 + (50.2 + 66.49)	50.2 + (50.2 + 66.49)
	Number of Revolution(@60Hz)	R.P.M	3,600 + 3,488	3,600 + (3,600 + 3,488)	3,600 + (3,600 + 3,488)
	Motor Output x Number	W	(5,143 + 4,950) x 1	5,143 + (5,143 + 4,950) x 1	5,143 + (5,143 + 4,950) x 1
	Starting Method		Inverter, Direct On Line	Inverter, Direct On Line	Inverter, Direct On Line
	Inverter operation range	Hz	20 ~ 120	20 ~ 120	20 ~ 120
	Oil Type		FVC68D(PVE)	FVC68D(PVE)	FVC68D(PVE)
	Oil Charge	cc	5,500	9,000	9,000
Fan	Type		Propeller fan	Propeller fan	Propeller fan
	Motor Output x Number	W	600 x 2	750 + (600 x 2)	750 + (600 x 2)
	Air Flow Rate(High)	CMM	250	390	420
		cfm	8,800	13,700	14,800
	Drive		DC INVERTER	DC INVERTER	DC INVERTER
	Discharge	Side / Top	TOP	TOP	TOP
Pipe Connctions	Liquid Pipes	mm(inch)	12.7(1/2)	12.7(1/2)	15.88(5/8)
	Gas Pipes	mm(inch)	28.58(1-1/8)	28.58(1-1/8)	28.58(1-1/8)
Dimensions(W x H x D)		mm	(1,240 x 1,680 x 760) x 1	(920 x 1,680 x 760) x 1 (1,240 x 1,680 x 760) x 1	(920 x 1,680 x 760) x 1 (1,240 x 1,680 x 760) x 1
		inch	(48.8 x 66.1 x 29.9) x 1	(36.2 x 66.1 x 29.9) x 1 (48.8 x 66.1 x 29.9) x 1	(36.2 x 66.1 x 29.9) x 1 (48.8 x 66.1 x 29.9) x 1
Net Weight		kg	270 x 1	190 x 1 + 270 x 1	190 x 1 + 270 x 1
		lbs	594 x 1	418 x 1 + 594 x 1	418 x 1 + 594 x 1
Protection Devices		High pressure protection	High pressure sensor, High pressure switch	High pressure sensor, High pressure switch	High pressure sensor, High pressure switch
		Comperssor/ Fan	Over-heat protection/ Fan driver overload protector	Over-heat protection/ Fan driver overload protector	Over-heat protection/ Fan driver overload protector
		Inverter	Over-heat protection, Over-current protection	Over-heat protection, Over-current protection	Over-heat protection, Over-current protection
Communication Cable		mm^2(VCTF-SB)	1.0 ~ 1.5 x 2C	1.0 ~ 1.5 x 2C	1.0 ~ 1.5 x 2C
Refigerant	Refigerant name		R410A	R410A	R410A
	Control		EEV	EEV	EEV
Power Supply		Ø , V, Hz	3, 460, 60	3, 460, 60	3, 460, 60

Notes:

1. Capacities are based on the following conditions:
   Cooling: - Indoor temp.: 80°FDB/67°FWB
   - Outdoor temp.: 95°FDB
   Heating: - Indoor temp.: 70°FDB
   - Outdoor temp.: 47°FDB/43°FWB
   Piping Length - Interconnecting Piping Length 7.5m(25ft)
   - Level Difference of Zero
2. Capacities are net capacities
3. EEV : Electronic Expansion Valve
4. HSS : High Pressure side shell
5. Wiring cable size must comply with the applicable local and national code.
6. Due to our policy of innovation some specifications may be changed without prior notification

#

	Inv comp.	Const. comp.
Piston Displacement	50.2	66.49
Number of Revolution	3,600	3,488
Motor Output	5,143	4,950

Conversion Formula
RT = kW x 0.284
kcal/h = kW x 860
Btu/h = kW x 3412
CFM = m^3/min x 35.3

Heat Pump(60Hz)

HP			22	24	26
Model Name	Combination Unit		**ARUN216DT3**	**ARUN240DT3**	**ARUN264DT3**
	Independent Unit		**ARUN072DT3**	**ARUN096DT3**	**ARUN121DT3**
			ARUN144DT3	**ARUN144DT3**	**ARUN144DT3**
Capacity	Cooling Nominal	Btu/h	216,000	240,000	264,000
	Cooling Rated		206,000	228,000	250,000
	Cooling Nominal	kW	63.2	70.4	77.1
	Cooling Nominal	kcal/h	54,400	60,600	66,300
	Heating Nominal	Btu/h	243,000	270,000	297,000
	Heating Rated		230,000	256,000	282,000
	Heating Nominal	kW	71.2	79.2	86.9
	Heating Nominal	kcal/h	61,200	68,000	74,800
Casing Color			Warm Gray Morning Gray	Warm Gray Morning Gray	Warm Gray Morning Gray
Heat Exchanger			Gold fin	Gold fin	Gold fin
Compressor	Type		HSS DC Scroll	HSS DC Scroll	HSS DC Scroll
	Piston Displacement	cm^3/rev	50.2 + (50.2 + 66.49)	(50.2 + 66.49) x 2	(50.2 + 66.49) x 2
	Number of Revolution(@60Hz)	R.P.M	3,600 + (3,600 + 3,488)	(3,600 + 3,488) x 2	(3,600 + 3,488) x 2
	Motor Output x Number	W	5,143 + (5,143 + 4,950) x 1	(5,143 + 4,950) x 2	(5,143 + 4,950) x 2
	Starting Method		Inverter, Direct On Line	Inverter, Direct On Line	Inverter, Direct On Line
	Inverter operation range	Hz	20 ~ 120	20 ~ 120	20 ~ 120
	Oil Type		FVC68D(PVE)	FVC68D(PVE)	FVC68D(PVE)
	Oil Charge	cc	11,000	11,000	11,000
Fan	Type		Propeller fan	Propeller fan	Propeller fan
	Motor Output x Number	W	750 + (600 x 2)	(600 x 2) × 2	(600 x 2) × 2
	Air Flow Rate(High)	CMM	430	460	490
		cfm	15,100	16,200	17,300
	Drive		DC INVERTER	DC INVERTER	DC INVERTER
	Discharge	Side / Top	TOP	TOP	TOP
Pipe Connctions	Liquid Pipes	mm(inch)	15.88(5/8)	15.88(5/8)	15.88(5/8)
	Gas Pipes	mm(inch)	28.58(1-1/8)	28.58(1-1/8)	34.9(1-3/8)
Dimensions(W x H x D)		mm	(920 × 1,680 × 760) × 1 (1,240 × 1,680 × 760) × 1	(1,240 × 1,680 × 760) × 2	(1,240 × 1,680 × 760) × 2
		inch	(36.2 × 66.1 × 29.9) × 1 (48.8 × 66.1 × 29.9) × 1	(48.8 × 66.1 × 29.9) × 2	(48.8 × 66.1 × 29.9) × 2
Net Weight		kg	190 × 1 + 270 × 1	270 × 2	270 × 2
		lbs	418 × 1 + 594 × 1	594 × 2	594 × 2
Protection Devices		High pressure protection	High pressure sensor, High pressure switch	High pressure sensor, High pressure switch	High pressure sensor, High pressure switch
		Comperssor/ Fan	Over-heat protection/ Fan driver overload protector	Over-heat protection/ Fan driver overload protector	Over-heat protection/ Fan driver overload protector
		Inverter	Over-heat protection, Over-current protection	Over-heat protection, Over-current protection	Over-heat protection, Over-current protection
Communication Cable		mm^2(VCTF-SB)	1.0 ~ 1.5 x 2C	1.0 ~ 1.5 x 2C	1.0 ~ 1.5 x 2C
Refigerant	Refigerant name		R410A	R410A	R410A
	Control		EEV	EEV	EEV
Power Supply		Ø , V, Hz	3, 460, 60	3, 460, 60	3, 460, 60

Notes:

1. Capacities are based on the following conditions:
   Cooling: - Indoor temp.: 80°FDB/67°FWB
   - Outdoor temp.: 95°FDB
   Heating: - Indoor temp.: 70°FDB
   - Outdoor temp.: 47°FDB/43°FWB
   Piping Length - Interconnecting Piping Length 7.5m(25ft)
   - Level Difference of Zero
2. Capacities are net capacities
3. EEV : Electronic Expansion Valve
4. HSS : High Pressure side shell
5. Wiring cable size must comply with the applicable local and national code.
6. Due to our policy of innovation some specifications may be changed without prior notification

#

	Inv comp.	Const. comp.
Piston Displacement	50.2	66.49
Number of Revolution	3,600	3,488
Motor Output	5,143	4,950

Conversion Formula
RT = kW x 0.284
kcal/h = kW x 860
Btu/h = kW x 3412
CFM = m^3/min x 35.3

Heat Pump(60Hz)

HP			28	32	34
Model Name	Combination Unit		**ARUN288DT3**	**ARUN312DT3**	**ARUN336DT3**
	Independent Unit		**ARUN144DT3**	**ARUN072DT3**	**ARUN072DT3**
			ARUN144DT3	**ARUN096DT3**	**ARUN121DT3**
				ARUN144DT3	**ARUN144DT3**
Capacity	Cooling Nominal	Btu/h	288,000	312,000	336,000
	Cooling Rated		274,000	296,000	320,000
	Cooling Nominal	kW	84.3	91.5	98.4
	Cooling Nominal	kcal/h	72,500	78,700	84,700
	Heating Nominal	Btu/h	324,000	351,000	378,000
	Heating Rated		308,000	334,000	361,000
	Heating Nominal	kW	94.9	102.9	110.8
	Heating Nominal	kcal/h	81,600	88,400	95,200
Casing Color			Warm Gray Morning Gray	Warm Gray Morning Gray	Warm Gray Morning Gray
Heat Exchanger			Gold fin	Gold fin	Gold fin
Compressor	Type		HSS DC Scroll	HSS DC Scroll	HSS DC Scroll
	Piston Displacement	cm^3/rev	(50.2 + 66.49) x 2	50.2 + (50.2 + 66.49) x 2	50.2 + (50.2 + 66.49) x 2
	Number of Revolution(@60Hz)	R.P.M	(3,600 + 3,488) x 2	3,600 + (3,600 + 3,488) x 2	3,600 + (3,600 + 3,488) x 2
	Motor Output x Number	W	(5,143 + 4,950) x 2	5,143 + (5,143 + 4,950) x 2	5,143 + (5,143 + 4,950) x 2
	Starting Method		Inverter, Direct On Line	Inverter, Direct On Line	Inverter, Direct On Line
	Inverter operation range	Hz	20 ~ 120	20 ~ 120	20 ~ 120
	Oil Type		FVC68D(PVE)	FVC68D(PVE)	FVC68D(PVE)
	Oil Charge	cc	11,000	14,500	14,500
Fan	Type		Propeller fan	Propeller fan	Propeller fan
	Motor Output x Number	W	(600 x 2) x 2	750 + (600 x 2) x 2	750 + (600 x 2) x 2
	Air Flow Rate(High)	CMM	500	640	670
		cfm	17,600	22,500	23,600
	Drive		DC INVERTER	DC INVERTER	DC INVERTER
	Discharge	Side / Top	TOP	TOP	TOP
Pipe Connctions	Liquid Pipes	mm(inch)	19.05(3/4)	19.05(3/4)	19.05(3/4)
	Gas Pipes	mm(inch)	34.9(1-3/8)	34.9(1-3/8)	34.9(1-3/8)
Dimensions(W x H x D)		mm	(1,240 x 1,680 x 760) x 2	(920 x 1,680 x 760) x 1 (1,240 x 1,680 x 760) x 2	(920 x 1,680 x 760) x 1 (1,240 x 1,680 x 760) x 2
		inch	(48.8 x 66.1 x 29.9) x 2	(36.2 x 66.1 x 29.9) x 1 (48.8 x 66.1 x 29.9) x 2	(36.2 x 66.1 x 29.9) x 1 (48.8 x 66.1 x 29.9) x 2
Net Weight		kg	270 x 2	190 x 1 + 270 x 2	190 x 1 + 270 x 2
		lbs	594 x 2	418 x 1 + 594 x 2	418 x 1 + 594 x 2
Protection Devices		High pressure protection	High pressure sensor, High pressure switch	High pressure sensor, High pressure switch	High pressure sensor, High pressure switch
		Comperssor/ Fan	Over-heat protection/ Fan driver overload protector	Over-heat protection/ Fan driver overload protector	Over-heat protection/ Fan driver overload protector
		Inverter	Over-heat protection, Over-current protection	Over-heat protection, Over-current protection	Over-heat protection, Over-current protection
Communication Cable		mm^2(VCTF-SB)	1.0 ~ 1.5 x 2C	1.0 ~ 1.5 x 2C	1.0 ~ 1.5 x 2C
Refigerant	Refigerant name		R410A	R410A	R410A
	Control		EEV	EEV	EEV
Power Supply		Ø , V, Hz	3, 460, 60	3, 460, 60	3, 460, 60

Notes:

1. Capacities are based on the following conditions:
   Cooling: - Indoor temp.: 80°FDB/67°FWB
   - Outdoor temp.: 95°FDB
   Heating: - Indoor temp.: 70°FDB
   - Outdoor temp.: 47°FDB/43°FWB
   Piping Length - Interconnecting Piping Length 7.5m(25ft)
   - Level Difference of Zero
2. Capacities are net capacities
3. EEV : Electronic Expansion Valve
4. HSS : High Pressure side shell
5. Wiring cable size must comply with the applicable local and national code.
6. Due to our policy of innovation some specifications may be changed without prior notification

#

	Inv comp.	Const. comp.
Piston Displacement	50.2	66.49
Number of Revolution	3,600	3,488
Motor Output	5,143	4,950

Conversion Formula
RT = kW x 0.284
kcal/h = kW x 860
Btu/h = kW x 3412
CFM = m^3/min x 35.3

Heat Pump(60Hz)

HP			36	38	40
Model Name	Combination Unit		**ARUN360DT3**	**ARUN384DT3**	**ARUN408DT3**
	Independent Unit		**ARUN072DT3**	**ARUN096DT3**	**ARUN121DT3**
			ARUN144DT3	**ARUN144DT3**	**ARUN144DT3**
			ARUN144DT3	**ARUN144DT3**	**ARUN144DT3**
Capacity	Cooling Nominal	Btu/h	360,000	384,000	408,000
	Cooling Rated		342,000	366,000	390,000
	Cooling Nominal	kW	105.6	112.6	119.6
	Cooling Nominal	kcal/h	90,900	96,900	102,900
	Heating Nominal	Btu/h	405,000	432,000	459,000
	Heating Rated		387,000	412,000	437,000
	Heating Nominal	kW	118.8	126.7	134.6
	Heating Nominal	kcal/h	102,000	108,800	115,600
Casing Color			Warm Gray Morning Gray	Warm Gray Morning Gray	Warm Gray Morning Gray
Heat Exchanger			Gold fin	Gold fin	Gold fin
Compressor	Type		HSS DC Scroll	HSS DC Scroll	HSS DC Scroll
	Piston Displacement	cm^3/rev	50.2 + (50.2 + 66.49) x 2	(50.2 + 66.49) x 3	(50.2 + 66.49) x 3
	Number of Revolution(@60Hz)	R.P.M	3,600 + (3,600 + 3,488) x 2	(3,600 + 3,488) x 3	(3,600 + 3,488) x 3
	Motor Output x Number	W	5,143 + (5,143 + 4,950) x 2	(5,143 + 4,950) x 3	(5,143 + 4,950) x 3
	Starting Method		Inverter, Direct On Line	Inverter, Direct On Line	Inverter, Direct On Line
	Inverter operation range	Hz	20 ~ 120	20 ~ 120	20 ~ 120
	Oil Type		FVC68D(PVE)	FVC68D(PVE)	FVC68D(PVE)
	Oil Charge	cc	14,500	16,500	16,500
Fan	Type		Propeller fan	Propeller fan	Propeller fan
	Motor Output x Number	W	750 + (600 x 2) x 2	(600 x 2) x 3	(600 x 2) x 3
	Air Flow Rate(High)	CMM	680	710	740
		cfm	23,900	25,000	26,100
	Drive		DC INVERTER	DC INVERTER	DC INVERTER
	Discharge	Side / Top	TOP	TOP	TOP
Pipe Connctions	Liquid Pipes	mm(inch)	19.05(3/4)	19.05(3/4)	19.05(3/4)
	Gas Pipes	mm(inch)	34.9(1-3/8)	34.9(1-3/8)	41.3(1-5/8)
Dimensions(W x H x D)		mm	(920 × 1,680 × 760) × 1 (1,240 × 1,680 × 760) × 2	(1,240 × 1,680 × 760) × 3	(1,240 × 1,680 × 760) × 3
		inch	(36.2 × 66.1 × 29.9) × 1 (48.8 × 66.1 × 29.9) × 2	(48.8 × 66.1 × 29.9) × 3	(48.8 × 66.1 × 29.9) × 3
Net Weight		kg	190 × 1 + 270 × 2	270 × 3	270 × 3
		lbs	418 × 1 + 594 × 2	594 × 3	594 × 3
Protection Devices		High pressure protection	High pressure sensor, High pressure switch	High pressure sensor, High pressure switch	High pressure sensor, High pressure switch
		Comperssor/ Fan	Over-heat protection/ Fan driver overload protector	Over-heat protection/ Fan driver overload protector	Over-heat protection/ Fan driver overload protector
		Inverter	Over-heat protection, Over-current protection	Over-heat protection, Over-current protection	Over-heat protection, Over-current protection
Communication Cable		mm^2(VCTF-SB)	1.0 ~ 1.5 x 2C	1.0 ~ 1.5 x 2C	1.0 ~ 1.5 x 2C
Refigerant	Refigerant name		R410A	R410A	R410A
	Control		EEV	EEV	EEV
Power Supply		Ø , V, Hz	3, 460, 60	3, 460, 60	3, 460, 60

Notes:

1. Capacities are based on the following conditions:
   Cooling: - Indoor temp.: 80°FDB/67°FWB
   - Outdoor temp.: 95°FDB
   Heating: - Indoor temp.: 70°FDB
   - Outdoor temp.: 47°FDB/43°FWB
   Piping Length - Interconnecting Piping Length 7.5m(25ft)
   - Level Difference of Zero
2. Capacities are net capacities
3. EEV : Electronic Expansion Valve
4. HSS : High Pressure side shell
5. Wiring cable size must comply with the applicable local and national code.
6. Due to our policy of innovation some specifications may be changed without prior notification

#

	Inv comp.	Const. comp.
Piston Displacement	50.2	66.49
Number of Revolution	3,600	3,488
Motor Output	5,143	4,950

Conversion Formula
RT = kW x 0.284
kcal/h = kW x 860
Btu/h = kW x 3412
CFM = m^3/min x 35.3

Heat Pump(60Hz)

HP			42
Model Name	Combination Unit		ARUN432DT3
	Independent Unit		ARUN144DT3
			ARUN144DT3
			ARUN144DT3
Capacity	Cooling Nominal	Btu/h	432,000
	Cooling Rated		414,000
	Cooling Nominal	kW	126.6
	Cooling Nominal	kcal/h	108,900
	Heating Nominal	Btu/h	486,000
	Heating Rated		462,000
	Heating Nominal	kW	142.5
	Heating Nominal	kcal/h	122,400
Casing Color			Warm Gray Morning Gray
Heat Exchanger			Gold fin
Compressor	Type		HSS DC Scroll
	Piston Displacement	cm^3/rev	(50.2 + 66.49) x 3
	Number of Revolution(@60Hz)	R.P.M	(3,600 + 3,488) x 3
	Motor Output x Number	W	(5,143 + 4,950) x 3
	Starting Method		Inverter, Direct On Line
	Inverter operation range	Hz	20 ~ 120
	Oil Type		FVC68D(PVE)
	Oil Charge	cc	16,500
Fan	Type		Propeller fan
	Motor Output x Number	W	(600 x 2) x 3
	Air Flow Rate(High)	CMM	750
		cfm	26,400
	Drive		DC INVERTER
	Discharge	Side / Top	TOP
Pipe Connctions	Liquid Pipes	mm(inch)	19.05(3/4)
	Gas Pipes	mm(inch)	41.3(1-5/8)
Dimensions(W x H x D)		mm	(1,240 × 1,680 × 760) × 3
		inch	(48.8 × 66.1 × 29.9) × 3
Net Weight		kg	270 × 3
		lbs	594 × 3
Protection Devices		High pressure protection	High pressure sensor, High pressure switch
		Comperssor/ Fan	Over-heat protection/ Fan driver overload protector
		Inverter	Over-heat protection, Over-current protection
Communication Cable		mm^2(VCTF-SB)	1.0 ~ 1.5 × 2C
Refigerant	Refigerant name		R410A
	Control		EEV
Power Supply		Ø , V, Hz	3, 460, 60

Notes:

1. Capacities are based on the following conditions:
   - Cooling: - Indoor temp.: 80°FDB/67°FWB
     - Outdoor temp.: 95°FDB
   - Heating: - Indoor temp.: 70°FDB
     - Outdoor temp.: 47°FDB/43°FWB
   - Piping Length - Interconnecting Piping Length 7.5m(25ft)
     - Level Difference of Zero
2. Capacities are net capacities
3. EEV : Electronic Expansion Valve
4. HSS : High Pressure side shell
5. Wiring cable size must comply with the applicable local and national code.
6. Due to our policy of innovation some specifications may be changed without prior notification

#

	Inv comp.	Const. comp.
Piston Displacement	50.2	66.49
Number of Revolution	3,600	3,488
Motor Output	5,143	4,950

Conversion Formula
RT = kW x 0.284
kcal/h = kW x 860
Btu/h = kW x 3412
CFM = m^3/min x 35.3

2. Functions

Category	Function	Single Unit	Series Unit
Reliability	Defrost/Deicing	O	O
	High pressure switch	O	O
	Phase protection	O	O
	Restart delay(3-minutes)	O	O
	Self diagnosis	O	O
	Soft start	O	O
	Trial operation	O	O
Convenience	Auto operation (artificial intelligence)	O	O
	Auto restart	O	O
CAC network Function	Network Solution (LGAP)	O	O

O : Applied X : Not applied - : No reation
Option : Model name & price are different according to options, and assembled in factory with main unit
Accessory : Installed at field, ordered and purchased separately by the corresponding model name, supplied with separated package.

Device		MULTI V III
Central Controller	Simple Controller	PQCSB101S0
	AC Ez	PQCSZ250S0
	Function controller	PQCSB101S0 + PQCSC101S0
	Function Scheduler	PQCSB101S0 + PQCSD130A0
	AC Smart II	PQCSW320A1E
	Expansion Kit	PQCSE440U0
	Option Kit	PQCSE341A0 / PQCSE342A0
	ACP	PQCPA11A0E / PQCPB11A0E
	AC Manager	PQCSS520A0E
BNU	LONWORKS Gateway	PQNFB16A1
	BACnet Gateway	PQNFB17B0
Do Kit		PQNFP00T0
Power Distribution Indicator(PDI)		PQNUD1S00
Cool / Heat Selector		PRDSBM
ODU Dry Contact		PQDSBCDVM0
Program	LG MV	Option
Other	Y branch	Accessory
	Header branch	Accessory
	Air Guide	Accessory
	Refrigerant Charging Kit	PRAC1

O : Applied X : Not applied - : No reation
Option : Model name & price are different according to options, and assembled in factory with main unit
Accessory : Installed at field, ordered and purchased separately by the corresponding model name, supplied with separated package.

3. Dimensions

Outdoor Unit

ARUN072BT3 ARUN072DT3

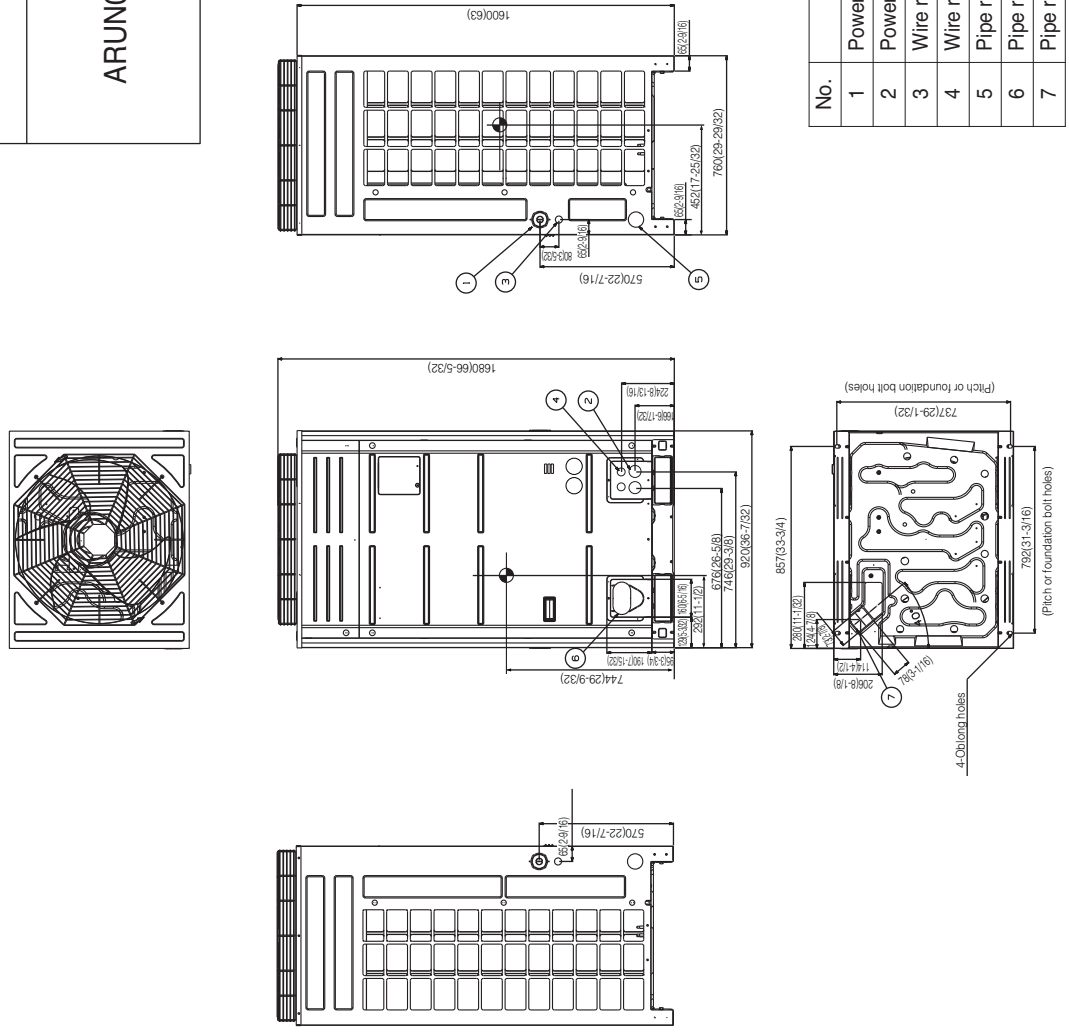

No.	Parts name	Remarks
1	Power cord routing hole(side)	Ø66(2-19/32)
2	Power cord routing hole(front)	Ø45(1-25/32)
3	Wire routing hole(side)	Ø30(1-3/16)
4	Wire routing hole(front)	Ø30(1-3/16)
5	Pipe routing hole(side)	Ø65(2-9/16)
6	Pipe routing hole(front)	
7	Pipe routing hole(front)	

◒ Gravity point

[Unit : mm(inch)]

LG Electronics

CHASSIS CODE: UX2

Outdoor Unit	
ARUN096BT3	ARUN096DT3
ARUN121BT3	ARUN121DT3
ARUN144BT3	ARUN144DT3

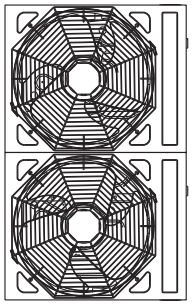

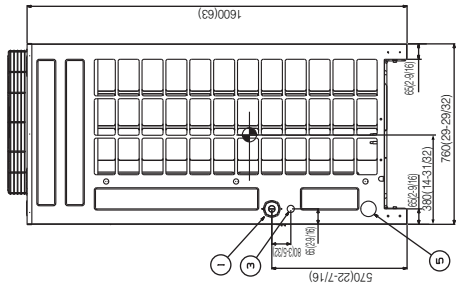

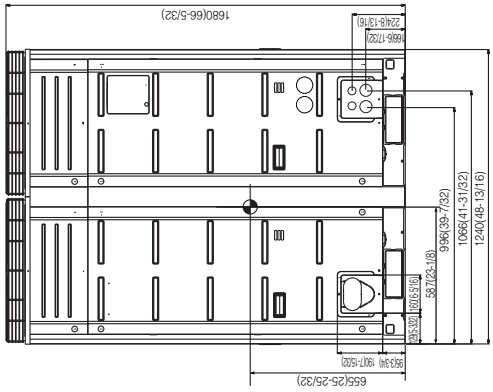

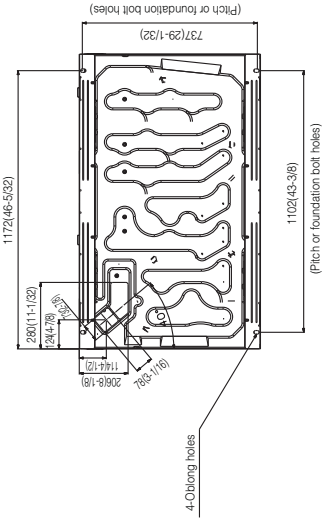

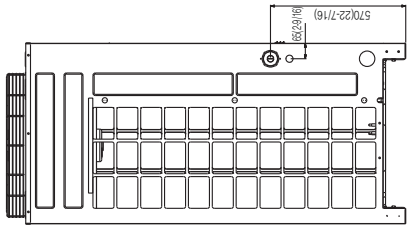

No.	Parts name	Remarks
1	Power cord routing hole(side)	Ø66(2-19/32)
2	Power cord routing hole(front)	Ø45(1-25/32)
3	Wire routing hole(side)	Ø30(1-3/16)
4	Wire routing hole(front)	Ø30(1-3/16)
5	Pipe routing hole(side)	Ø65(2-9/16)
6	Pipe routing hole(front)	
7	Pipe routing hole(front)	

CHASSIS CODE: UX3

◐ Gravity point

[Unit : mm(inch)]

LG Electronics

Outdoor Unit	
ARUN168BT3	ARUN168DT3
ARUN192BT3	ARUN192DT3
ARUN216BT3	ARUN216DT3

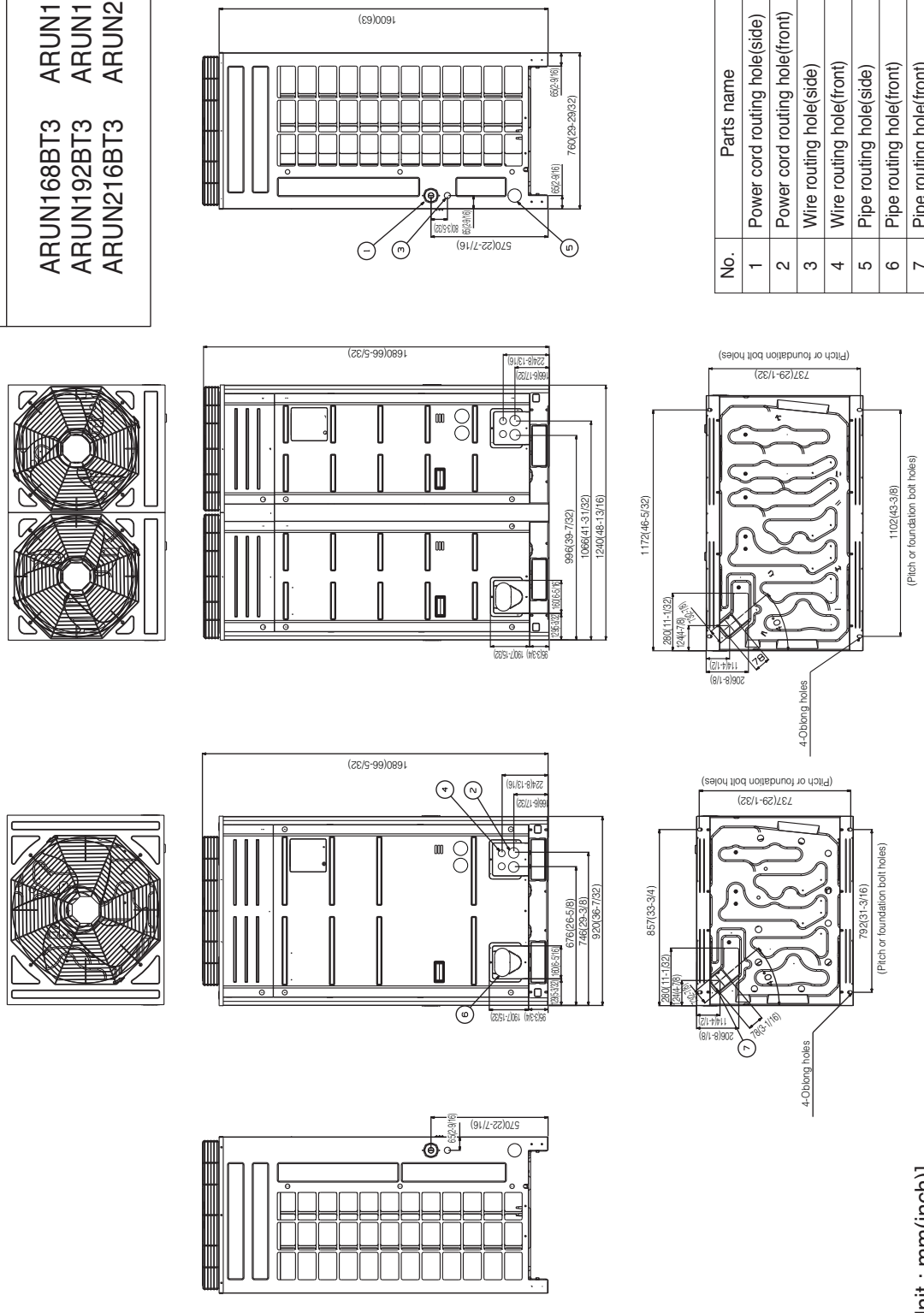

No.	Parts name	Remarks
1	Power cord routing hole(side)	Ø66(2-19/32)
2	Power cord routing hole(front)	Ø45(1-25/32)
3	Wire routing hole(side)	Ø30(1-3/16)
4	Wire routing hole(front)	Ø30(1-3/16)
5	Pipe routing hole(side)	Ø65(2-9/16)
6	Pipe routing hole(front)	
7	Pipe routing hole(front)	

[Unit : mm(inch)]

CHASSIS CODE: UX2 + UX3

LG Electronics

Outdoor Unit	
ARUN240BT3 ARUN264BT3 ARUN288BT3	ARUN240DT3 ARUN264DT3 ARUN288DT3

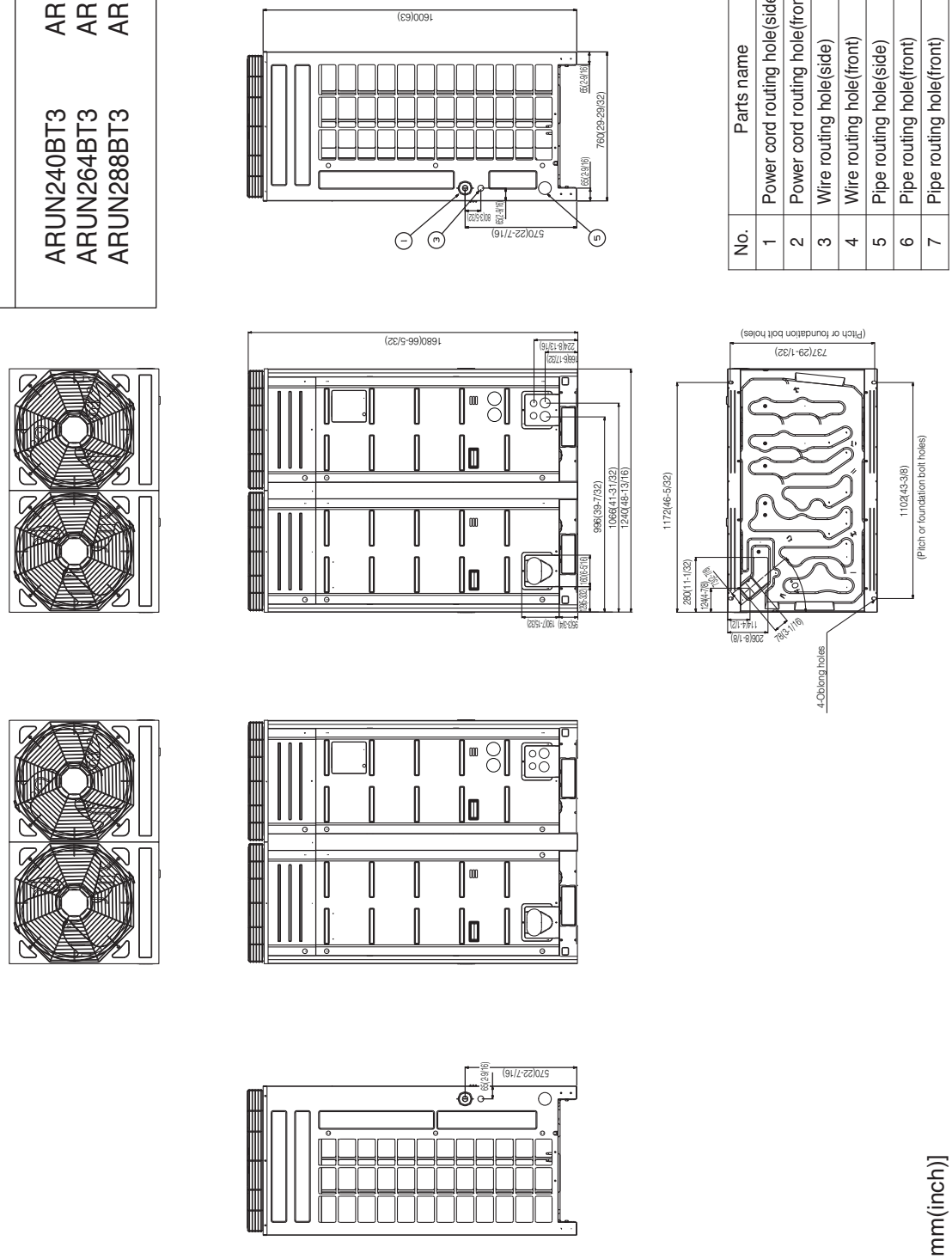

No.	Parts name	Remarks
1	Power cord routing hole(side)	Ø66(2-19/32)
2	Power cord routing hole(front)	Ø45(1-25/32)
3	Wire routing hole(side)	Ø30(1-3/16)
4	Wire routing hole(front)	Ø30(1-3/16)
5	Pipe routing hole(side)	Ø65(2-9/16)
6	Pipe routing hole(front)	
7	Pipe routing hole(front)	

[Unit : mm(inch)]

CHASSIS CODE: UX3 + UX3

LG Electronics

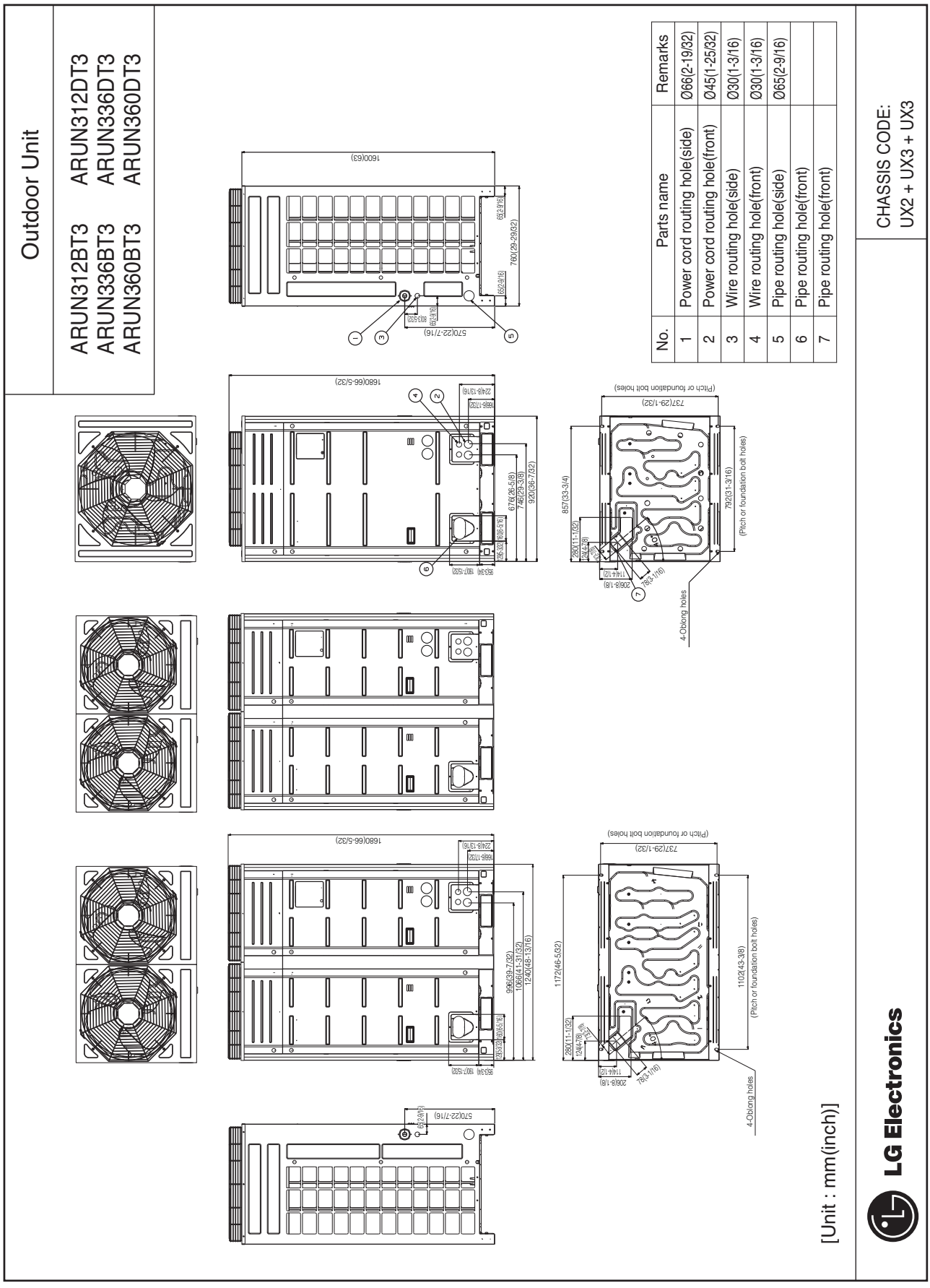

No.	Parts name	Remarks
1	Power cord routing hole(side)	Ø66(2-19/32)
2	Power cord routing hole(front)	Ø45(1-25/32)
3	Wire routing hole(side)	Ø30(1-3/16)
4	Wire routing hole(front)	Ø30(1-3/16)
5	Pipe routing hole(side)	Ø65(2-9/16)
6	Pipe routing hole(front)	
7	Pipe routing hole(front)	

Outdoor Unit	
ARUN384BT3 ARUN408BT3 ARUN432BT3	ARUN384DT3 ARUN408DT3 ARUN432DT3

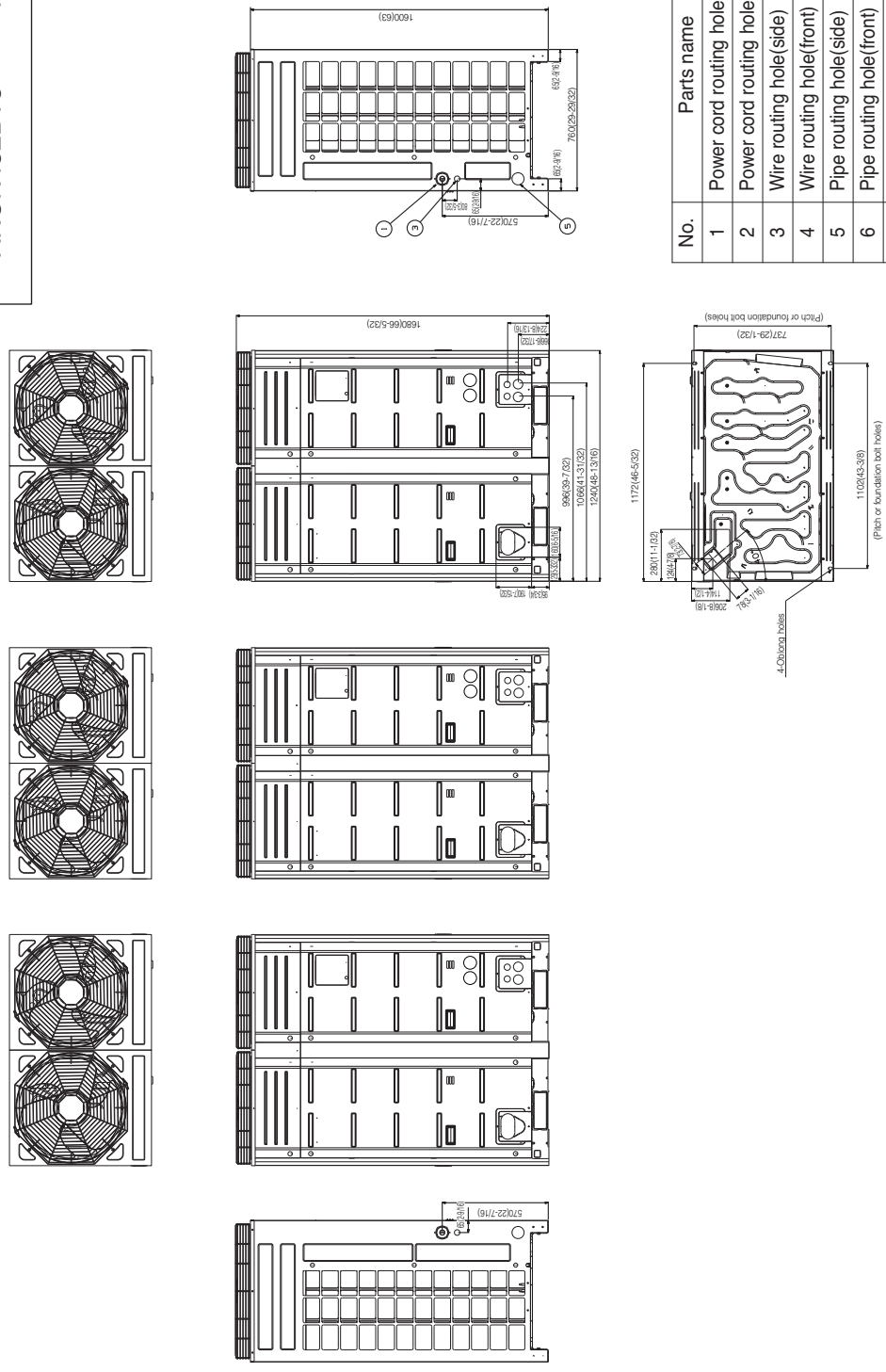

No.	Parts name	Remarks
1	Power cord routing hole(side)	Ø66(2-19/32)
2	Power cord routing hole(front)	Ø45(1-25/32)
3	Wire routing hole(side)	Ø30(1-3/16)
4	Wire routing hole(front)	Ø30(1-3/16)
5	Pipe routing hole(side)	Ø65(2-9/16)
6	Pipe routing hole(front)	
7	Pipe routing hole(front)	

CHASSIS CODE:
UX3 + UX3 + UX3

[Unit : mm(inch)]

LG Electronics

4. Piping Diagrams

4.1 Heat Pump Model

4.1.1 ARUN072BT3, ARUN072DT3

Cooling Operation

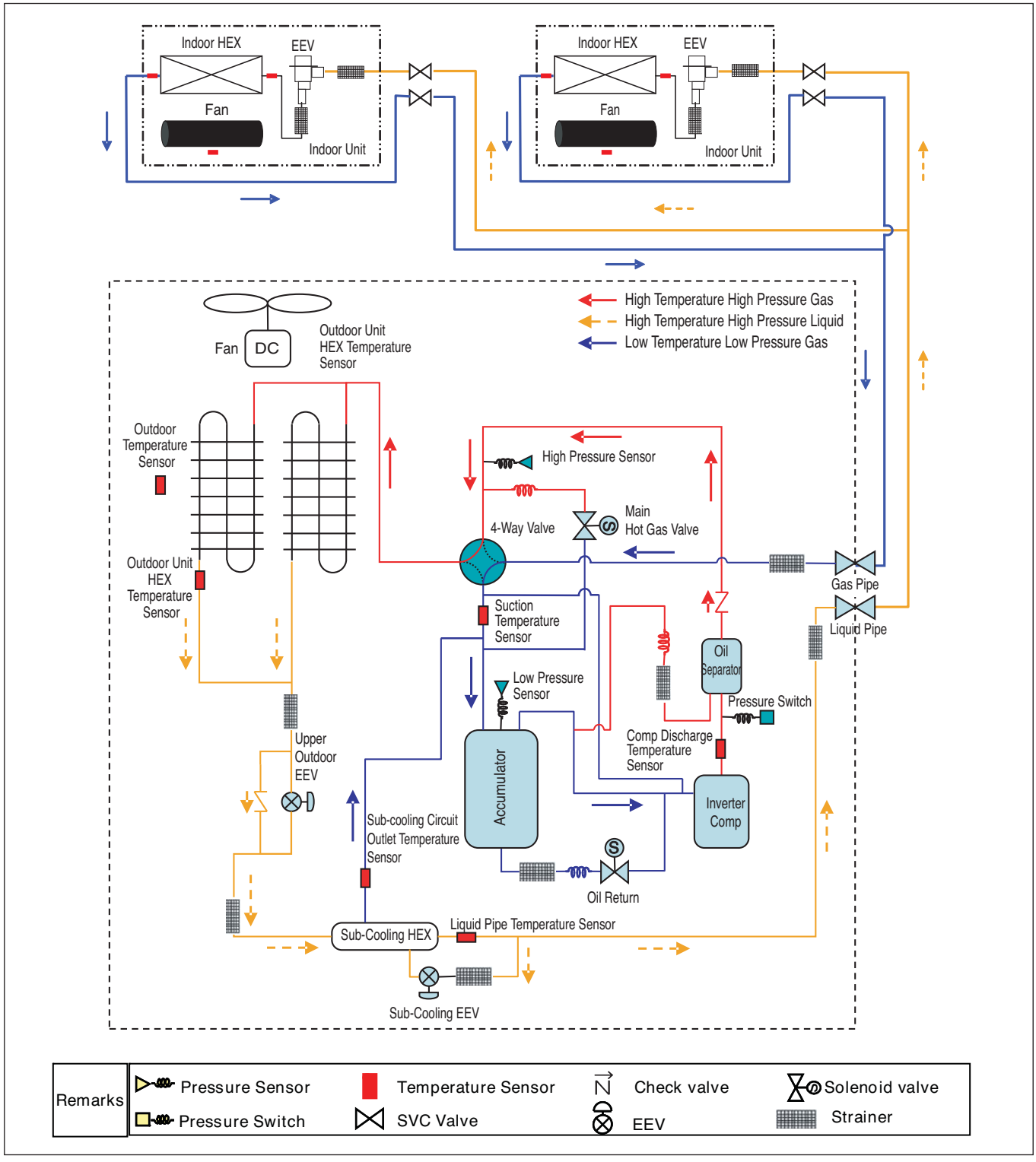

Heating Operation

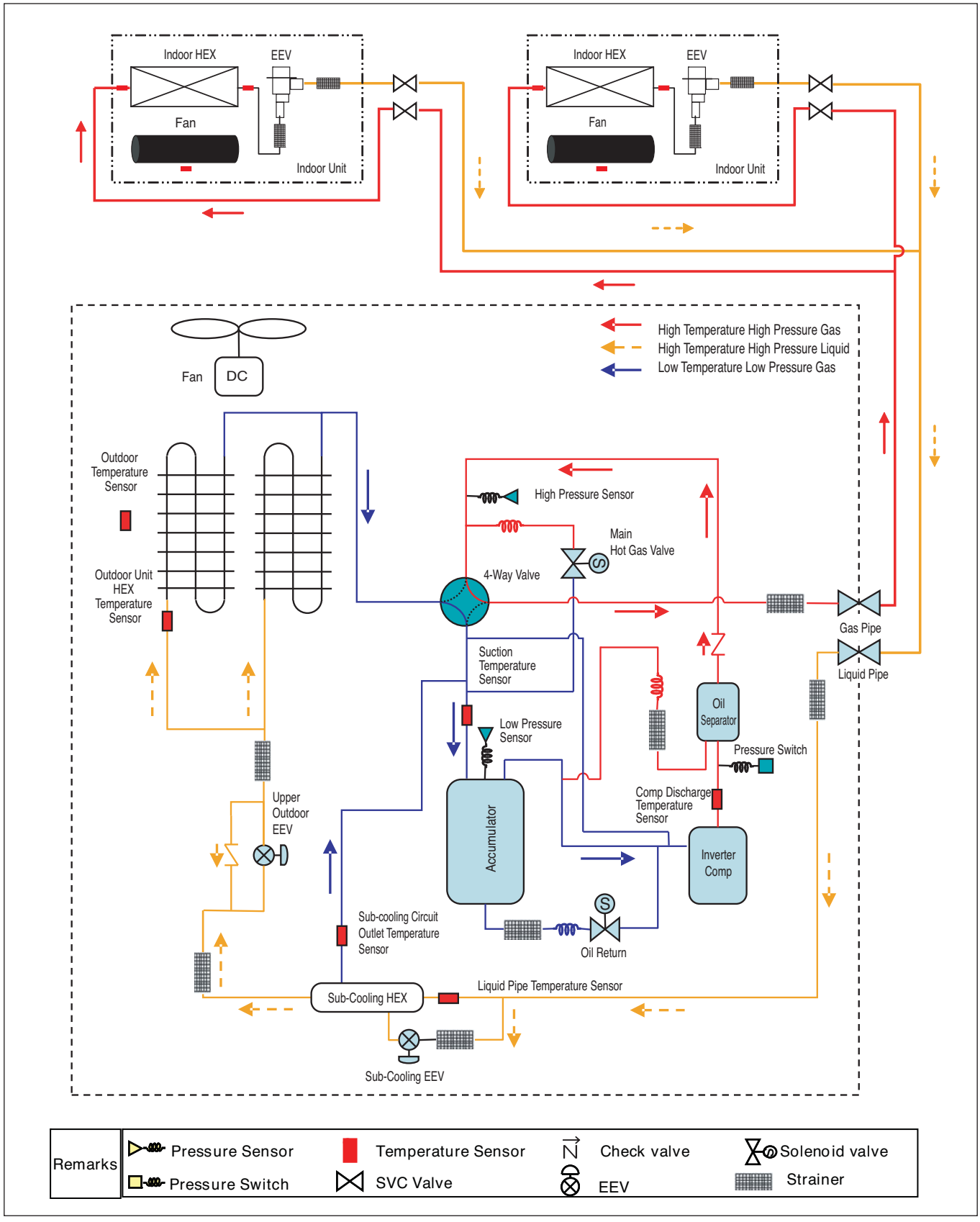

Oil Return/ Defrost Operation

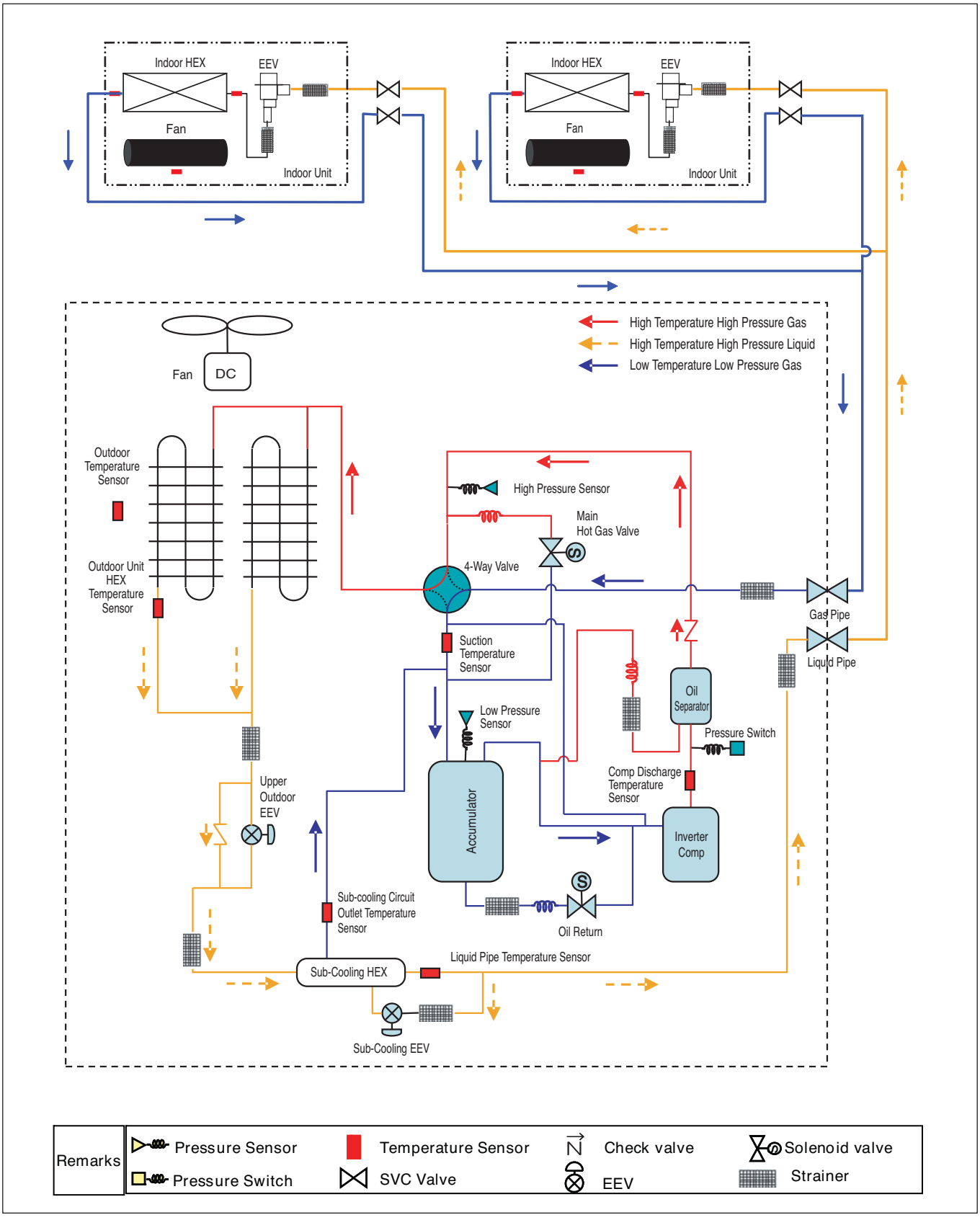

4.1.2 ARUN096BT3, ARUN121BT3, ARUN144BT3, ARUN096DT3, ARUN121DT3, ARUN144DT3

Cooling Operation

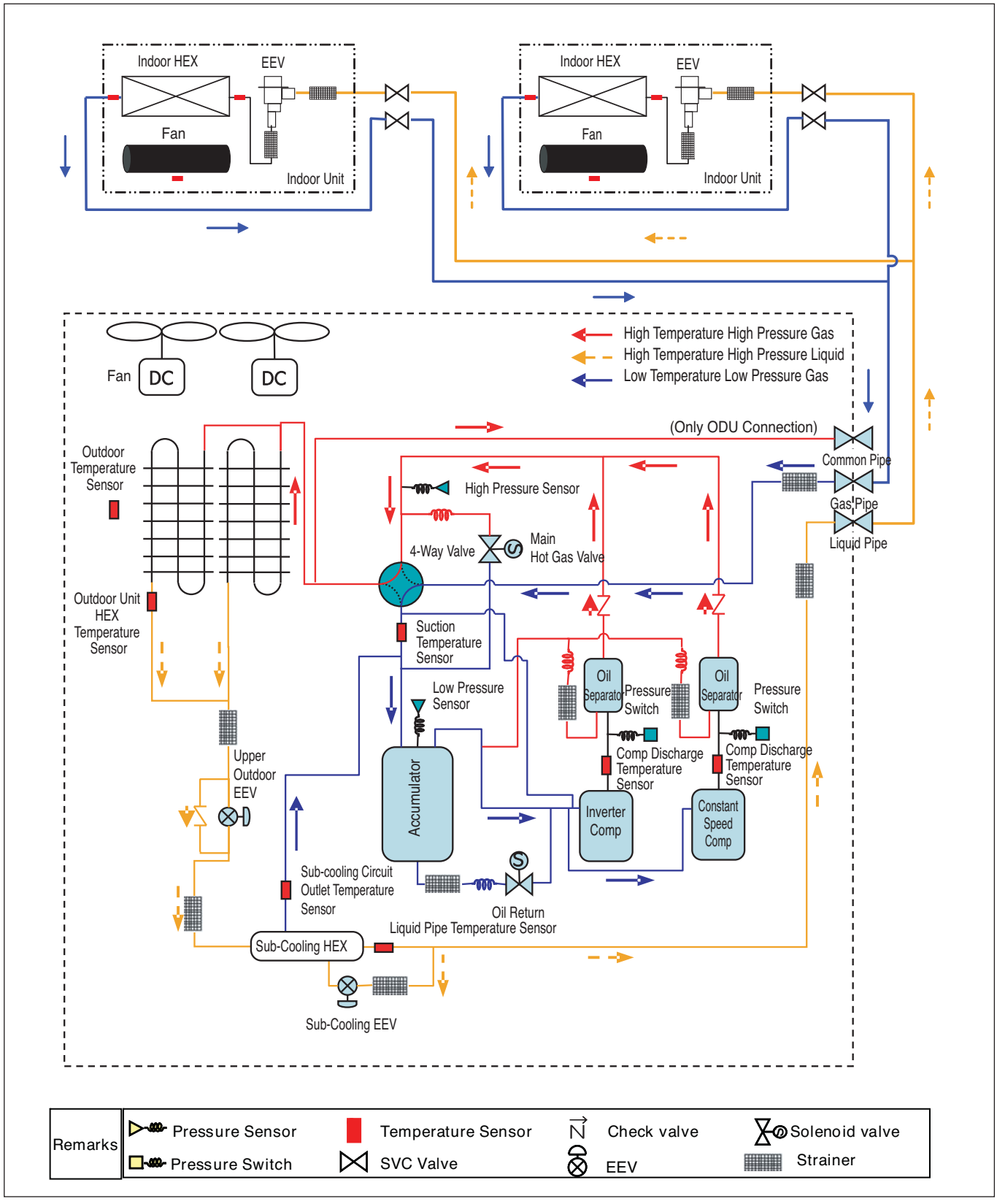

Heating Operation

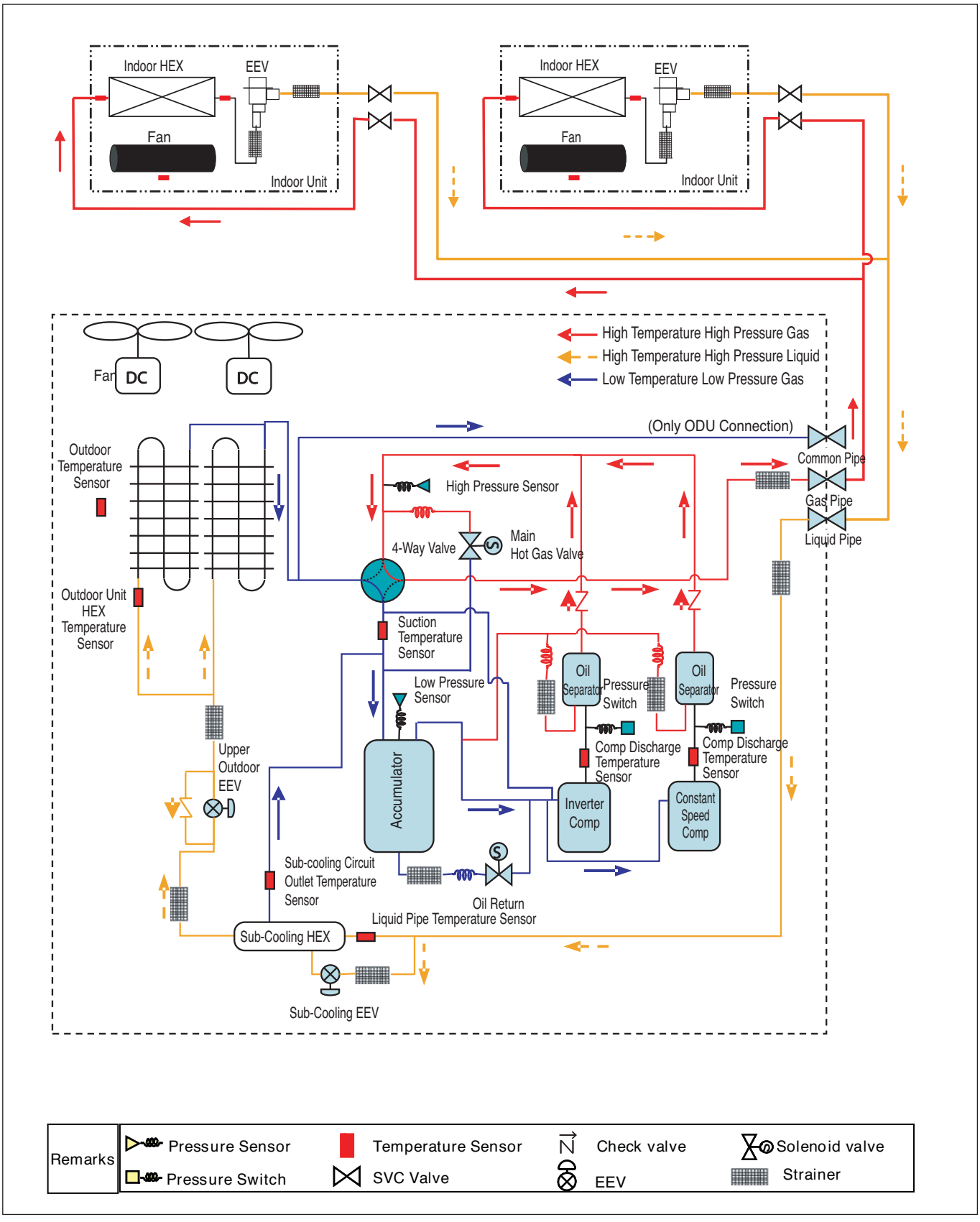

Oil Return/ Defrost Operation

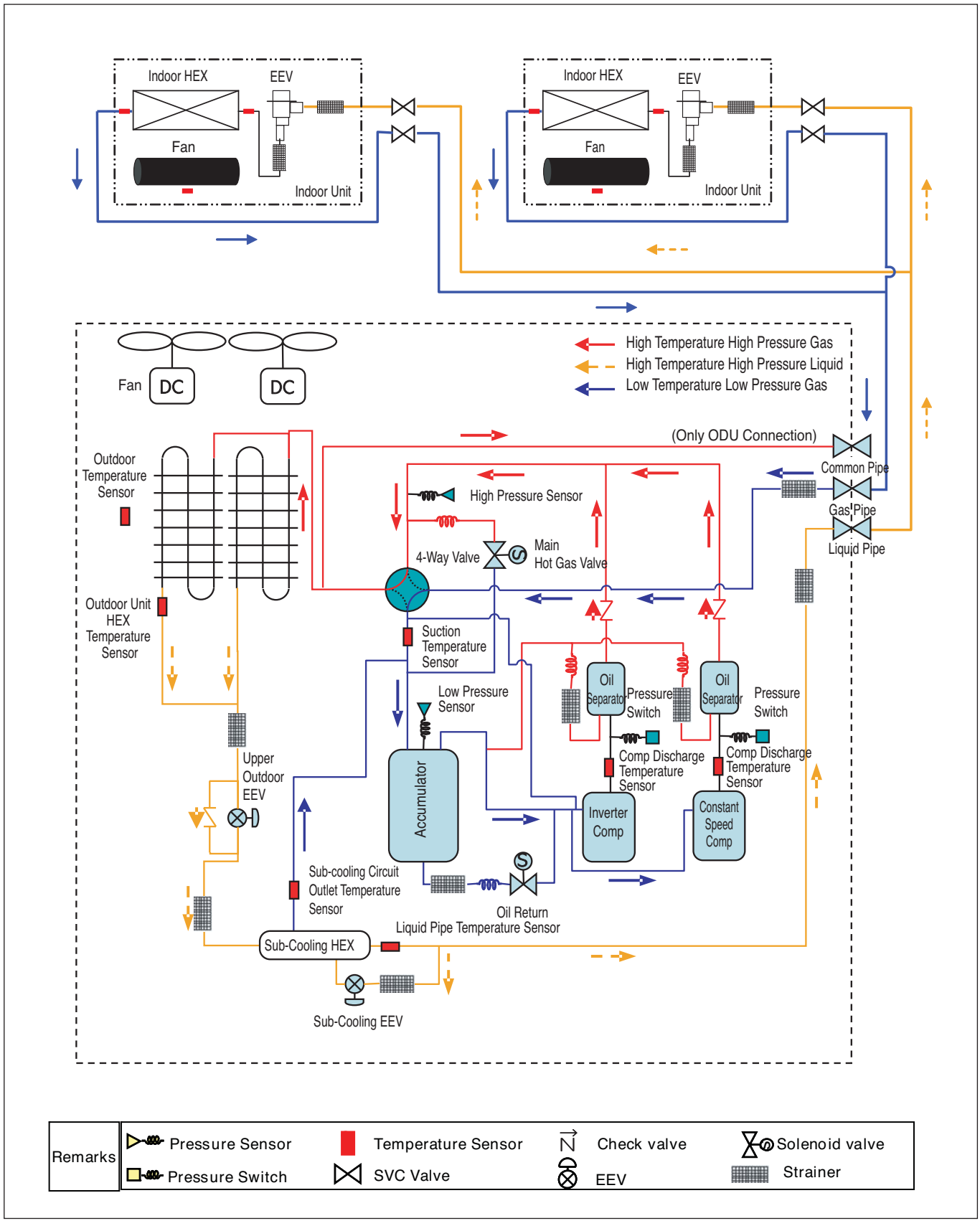

5. Wiring Diagrams

5.1 Heat Pump Model

5.1.1 ARUN072BT3

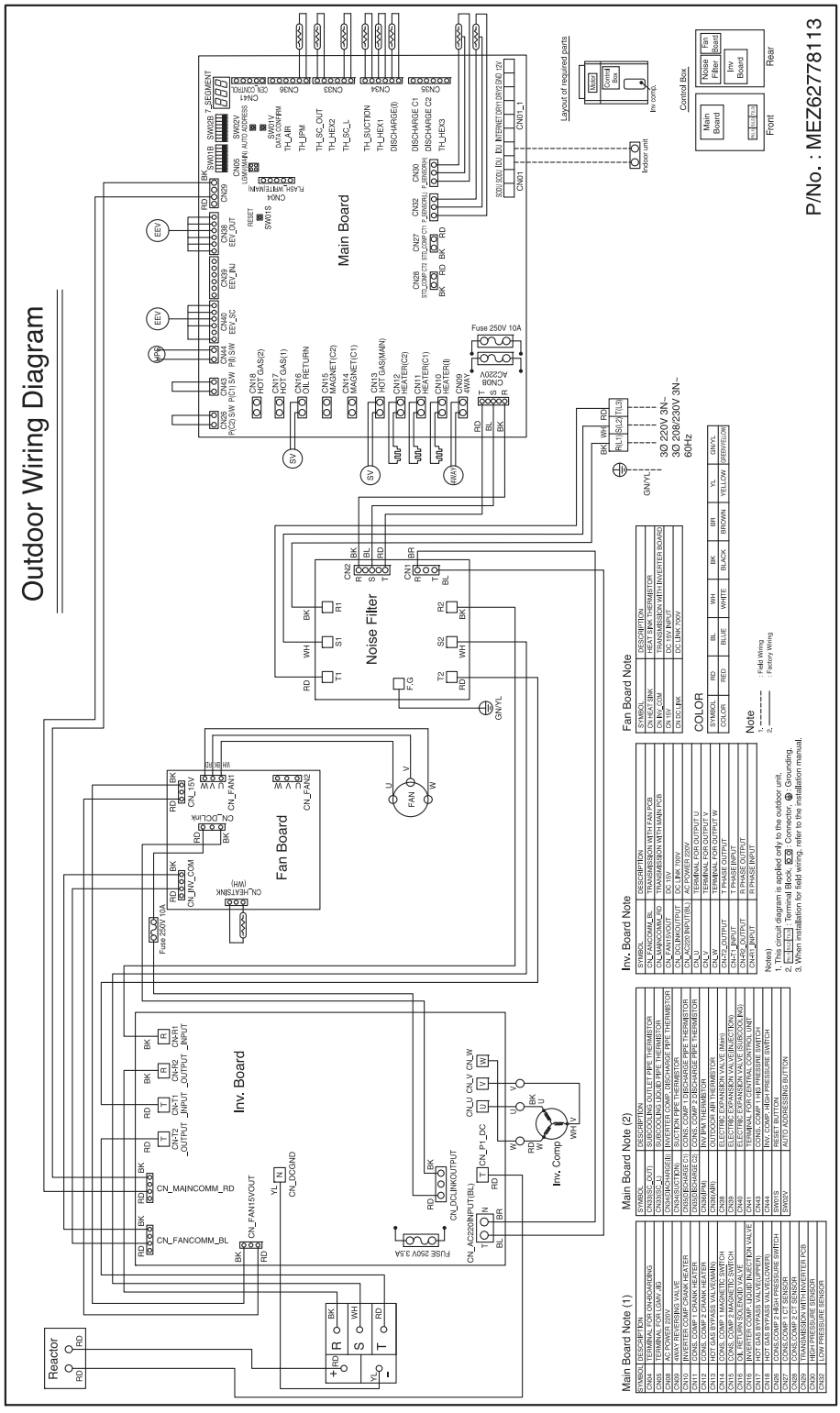

5.1.2 ARUN096BT3, ARUN121BT3, ARUN144BT3

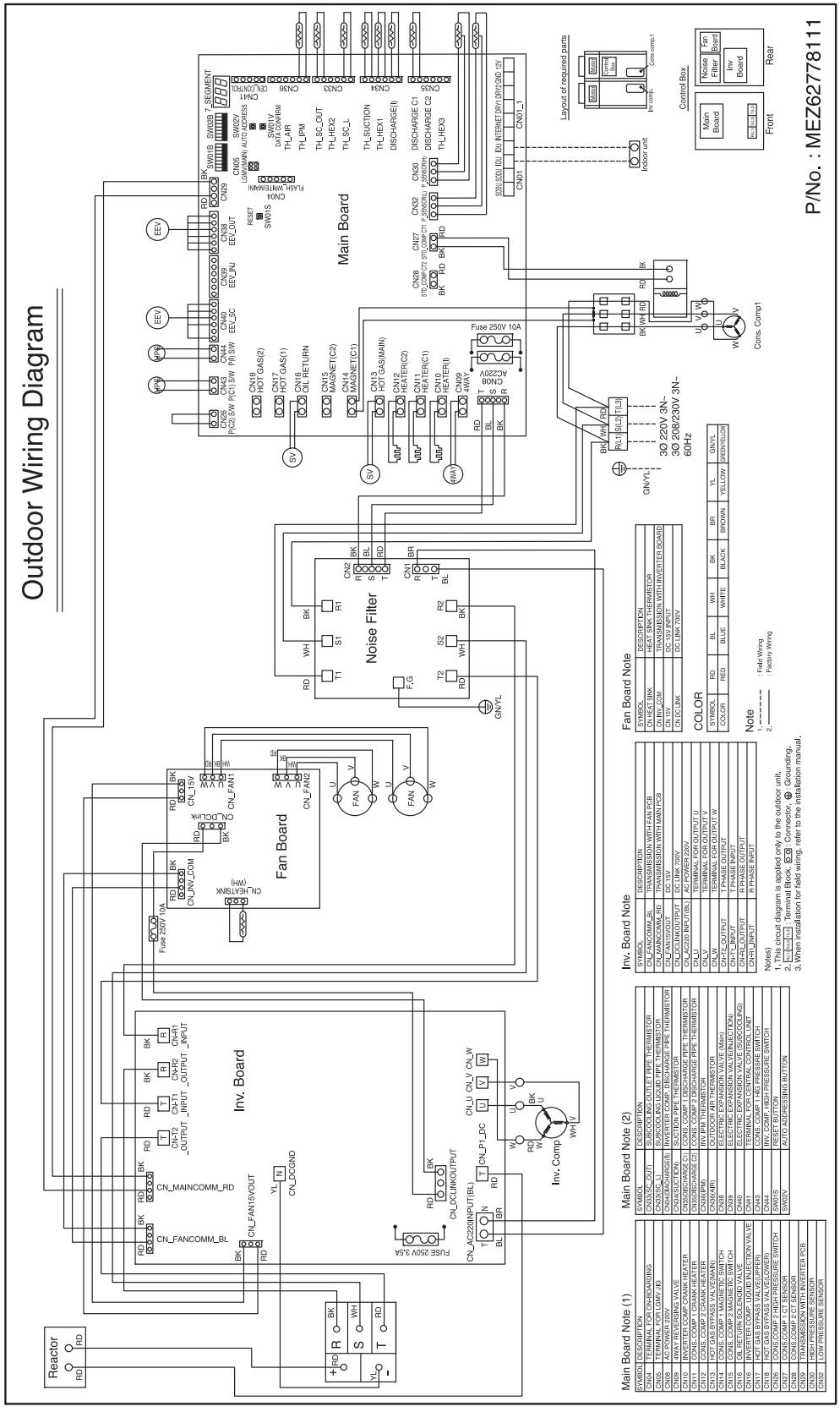

5.1.3 ARUN072DT3

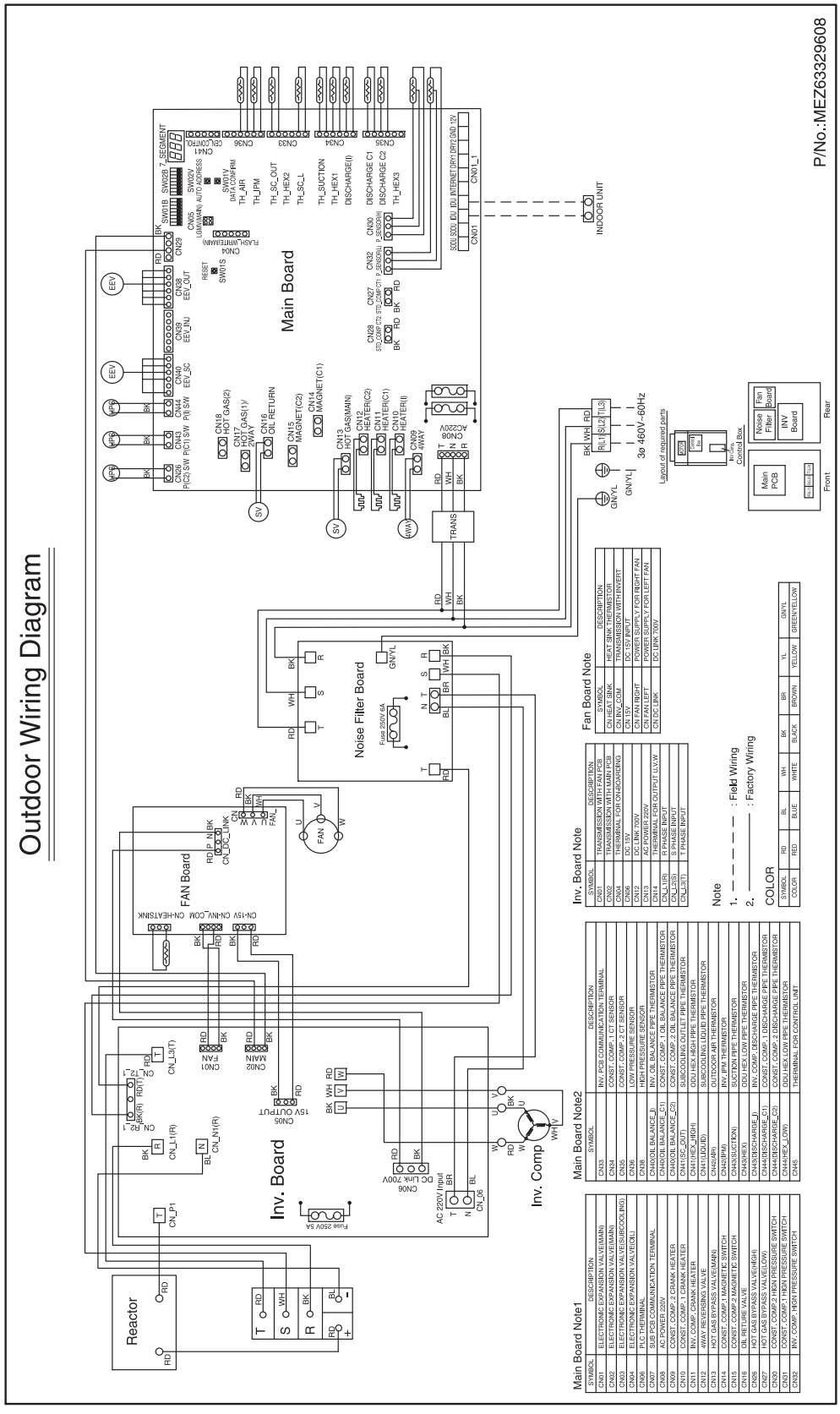

5.1.4 ARUN096DT3, ARUN121DT3, ARUN144DT3

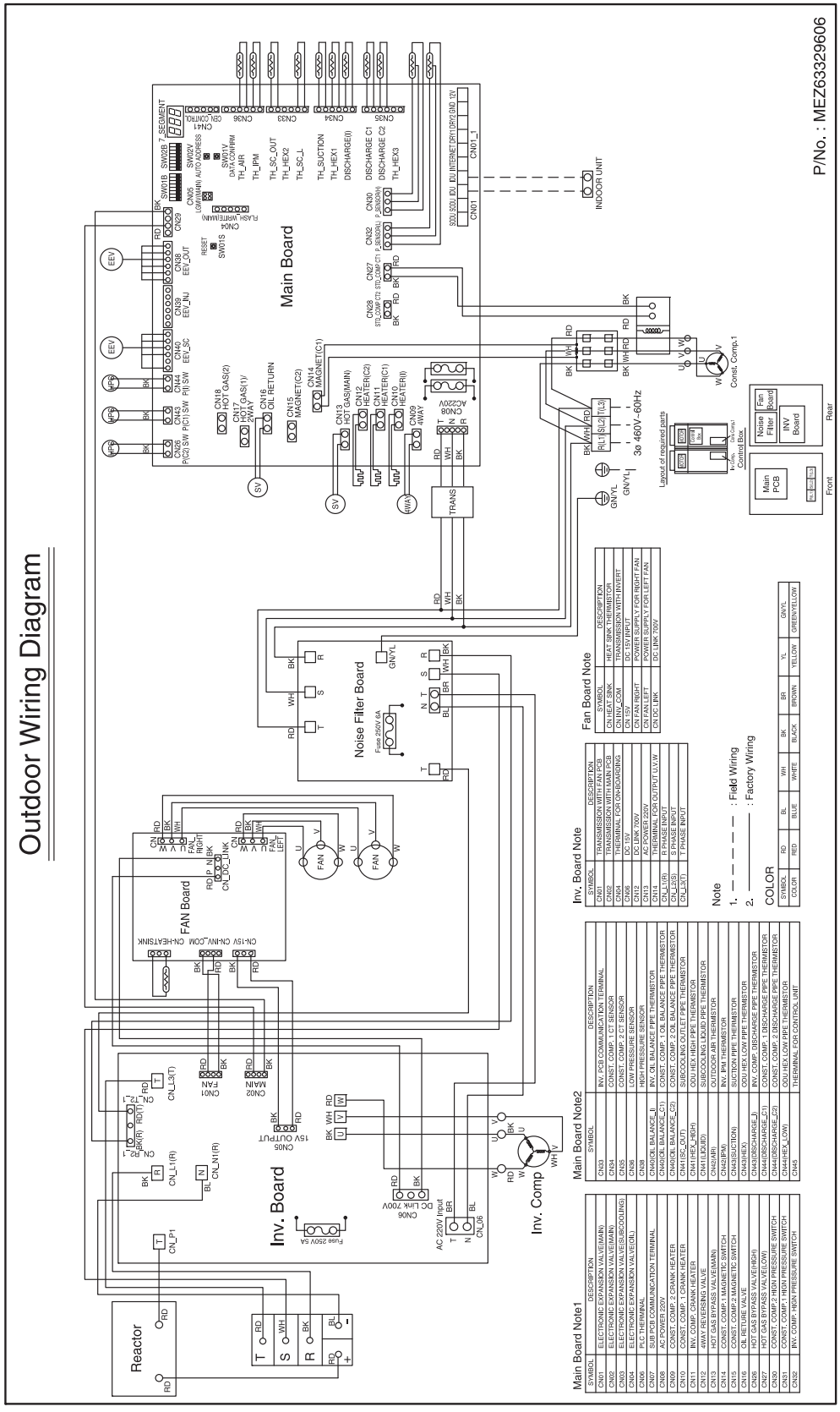

Heat pump

■ Main PCB

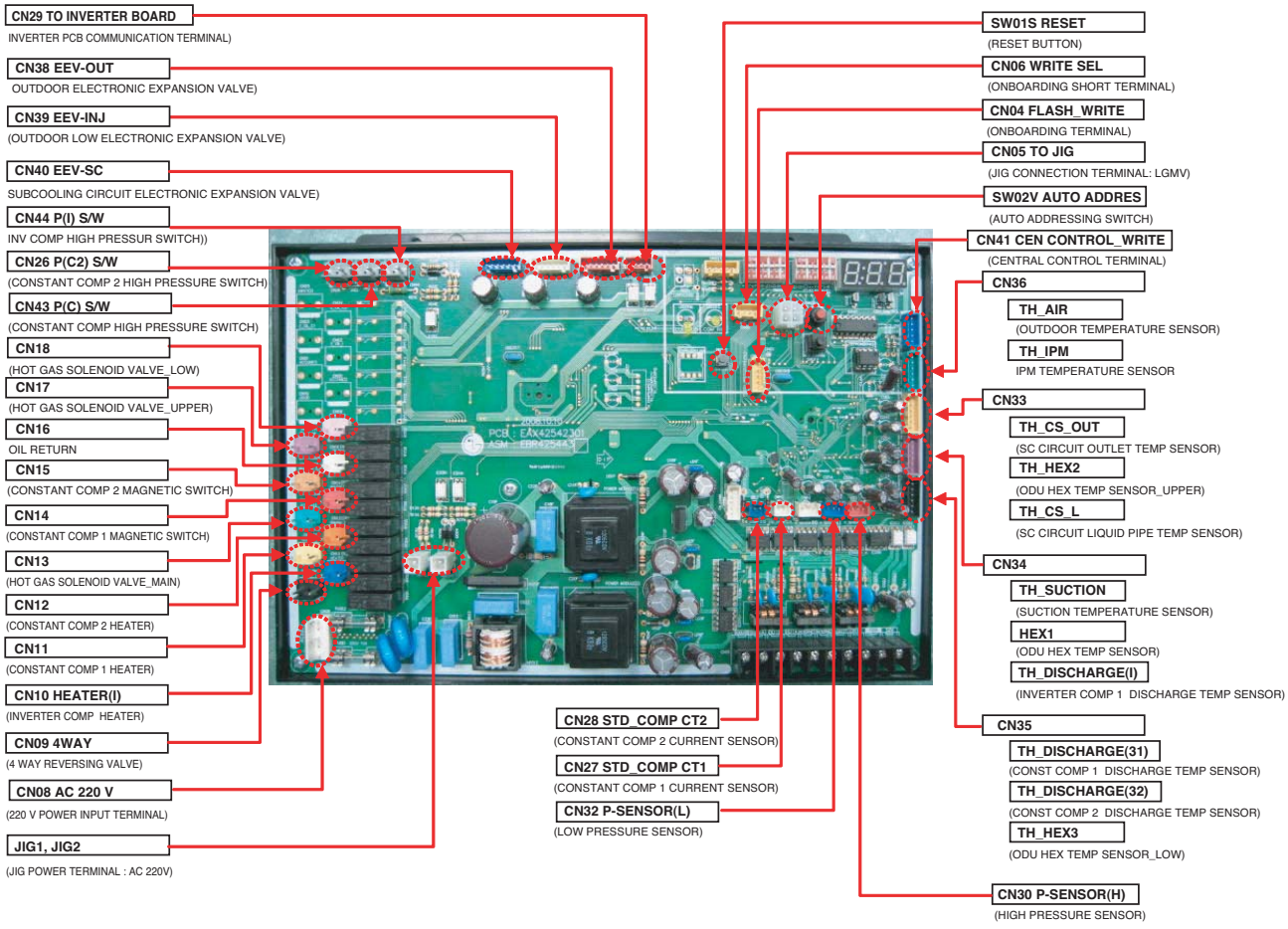

■ Noize Filter (3Φ, 208/230V)

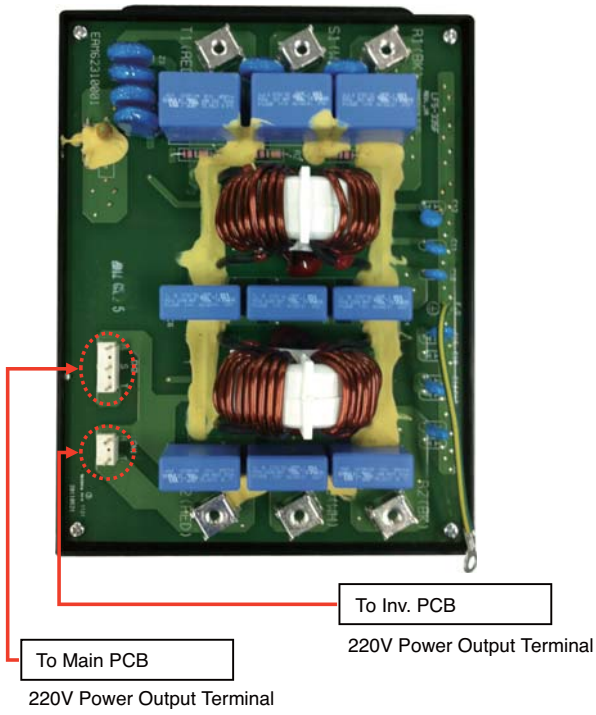

■ Inverter PCB (3Φ, 208/230V)

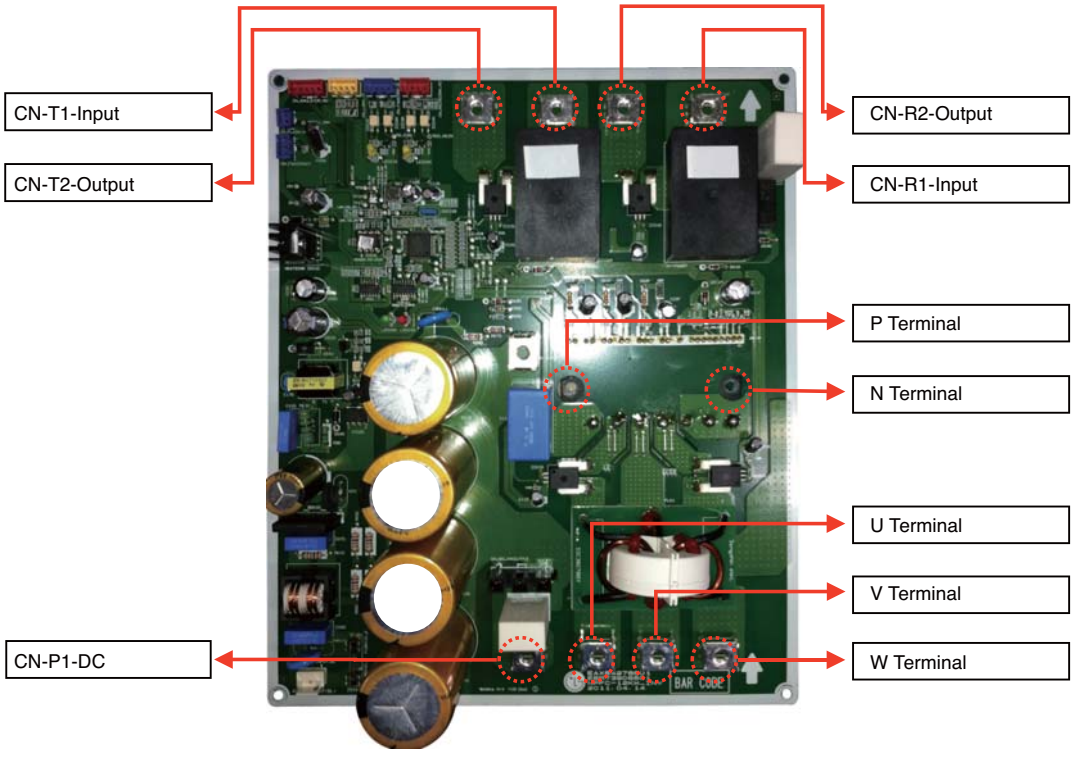

■ FAN PCB(3Φ, 208/230V)_ARUN072BT3

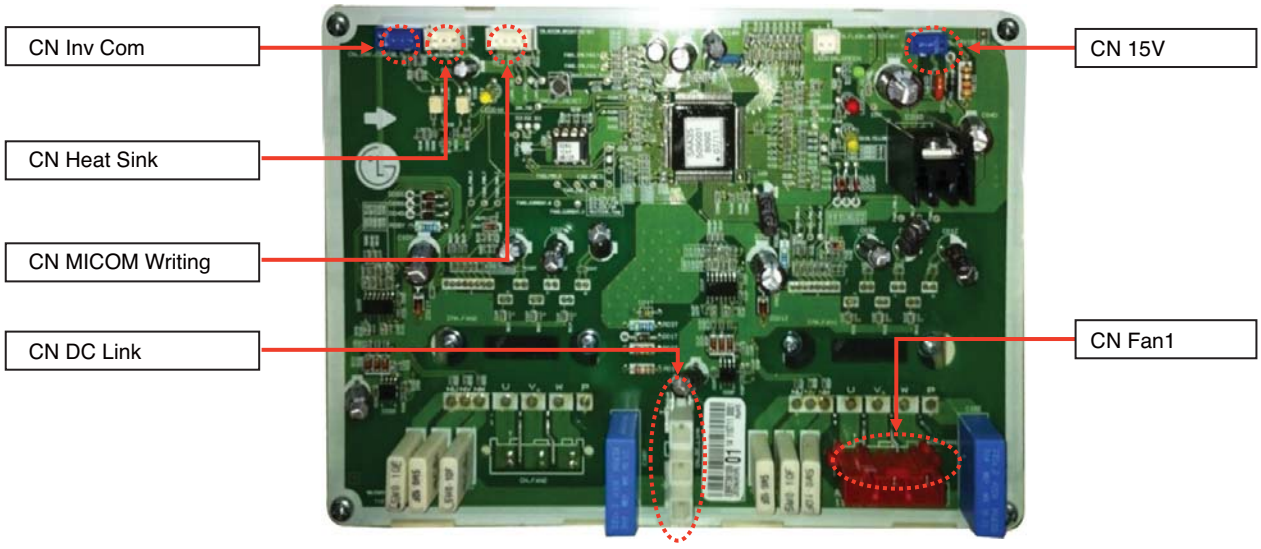

■ FAN PCB(3Φ, 208/230V)_ARUN096BT3, ARUN121BT3, ARUN144BT3

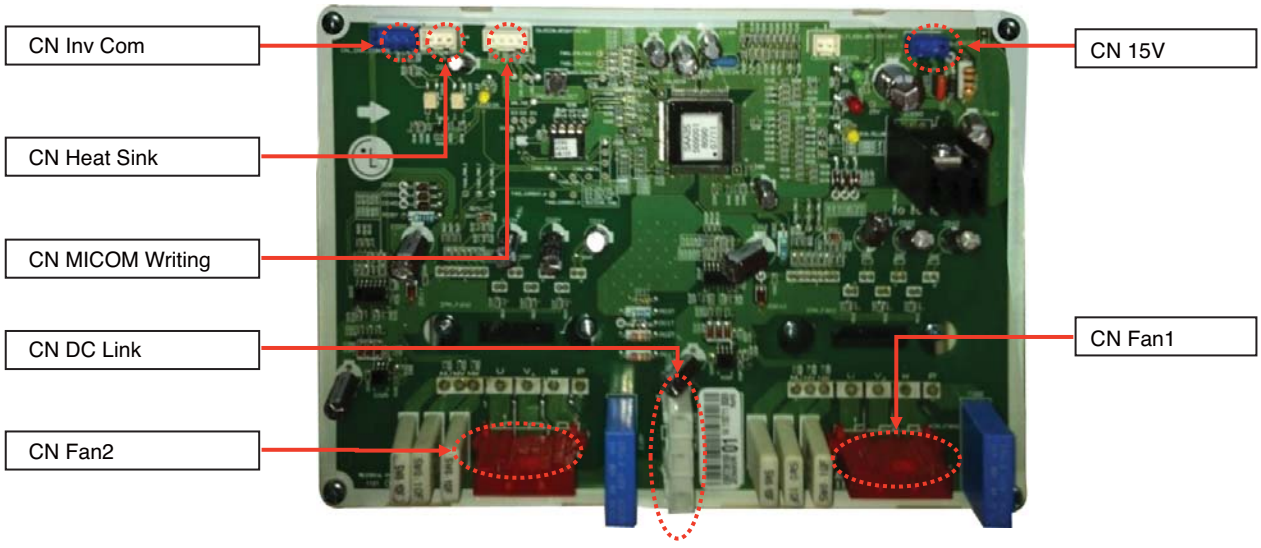

■ FAN PCB(3Φ, 460V)_ARUN072DT3

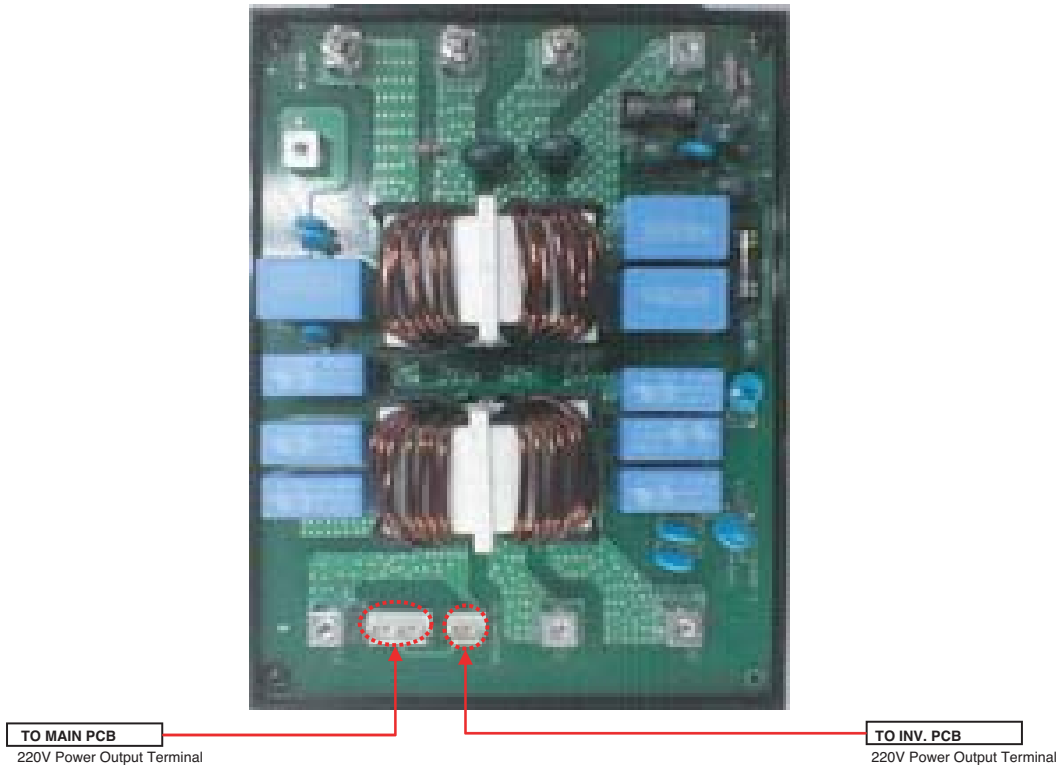

■ FAN PCB(3Φ, 460V)_ARUN096DT3, ARUN121DT3, ARUN144DT3

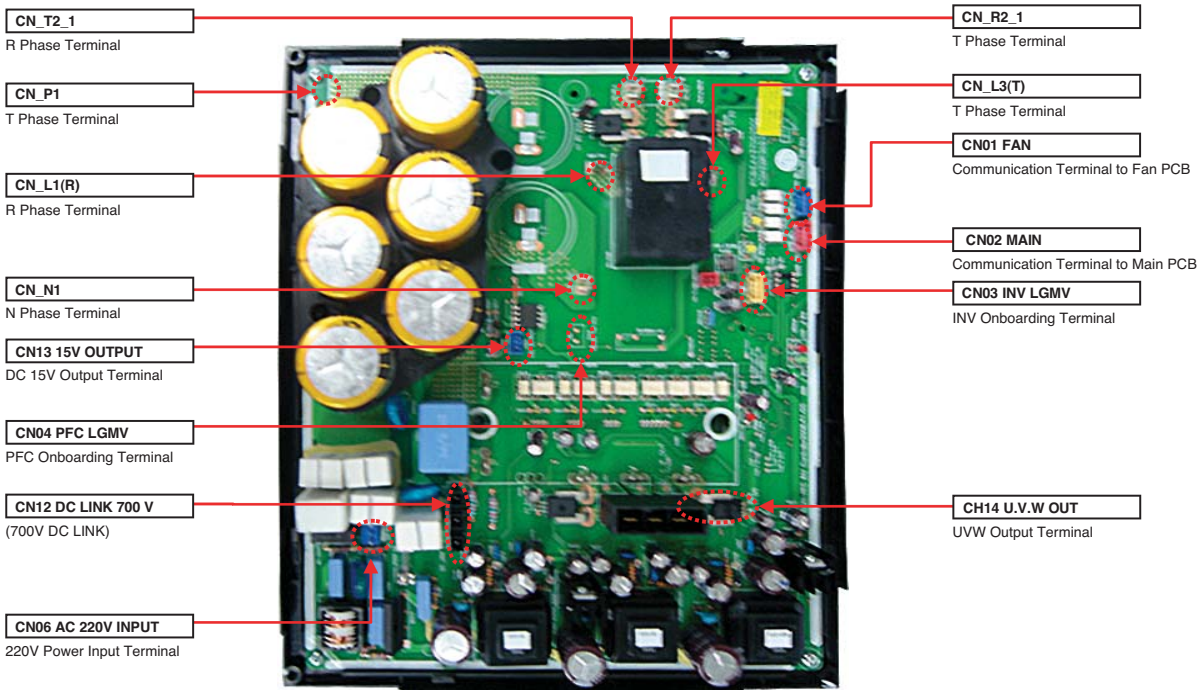

■ FAN PCB(3Φ, 460V)_ARUN072DT3

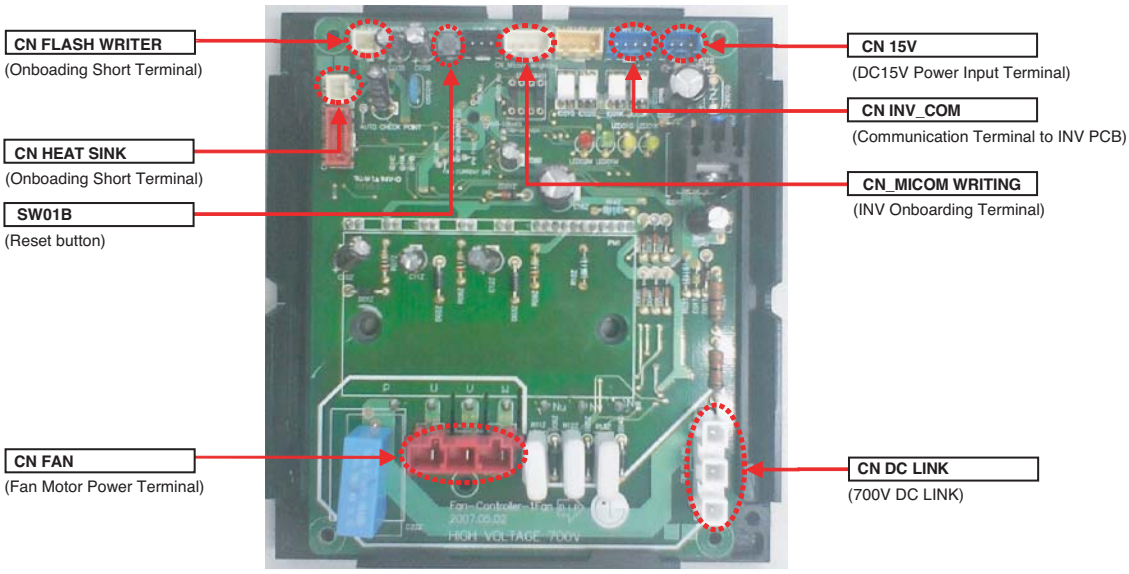

■ FAN PCB(3Φ, 460V)_ARUN096DT3, ARUN121DT3, ARUN144DT3

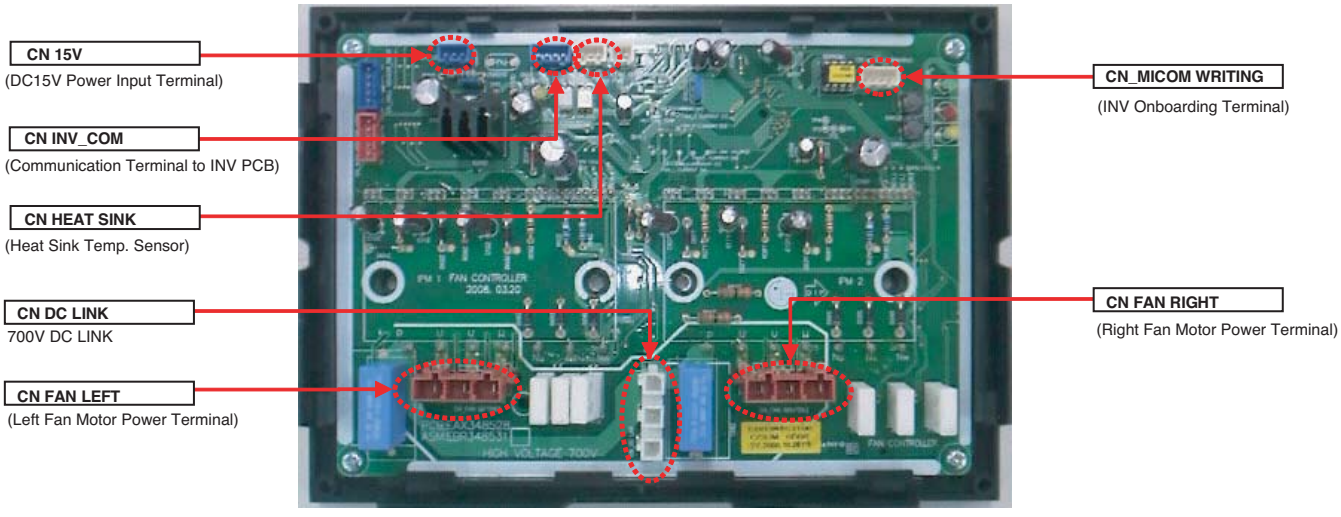

6. Exploded View

Outdoor Unit

6.1 Heat Pump Model

6.1.1 ARUN072BT3, ARUN072DT3

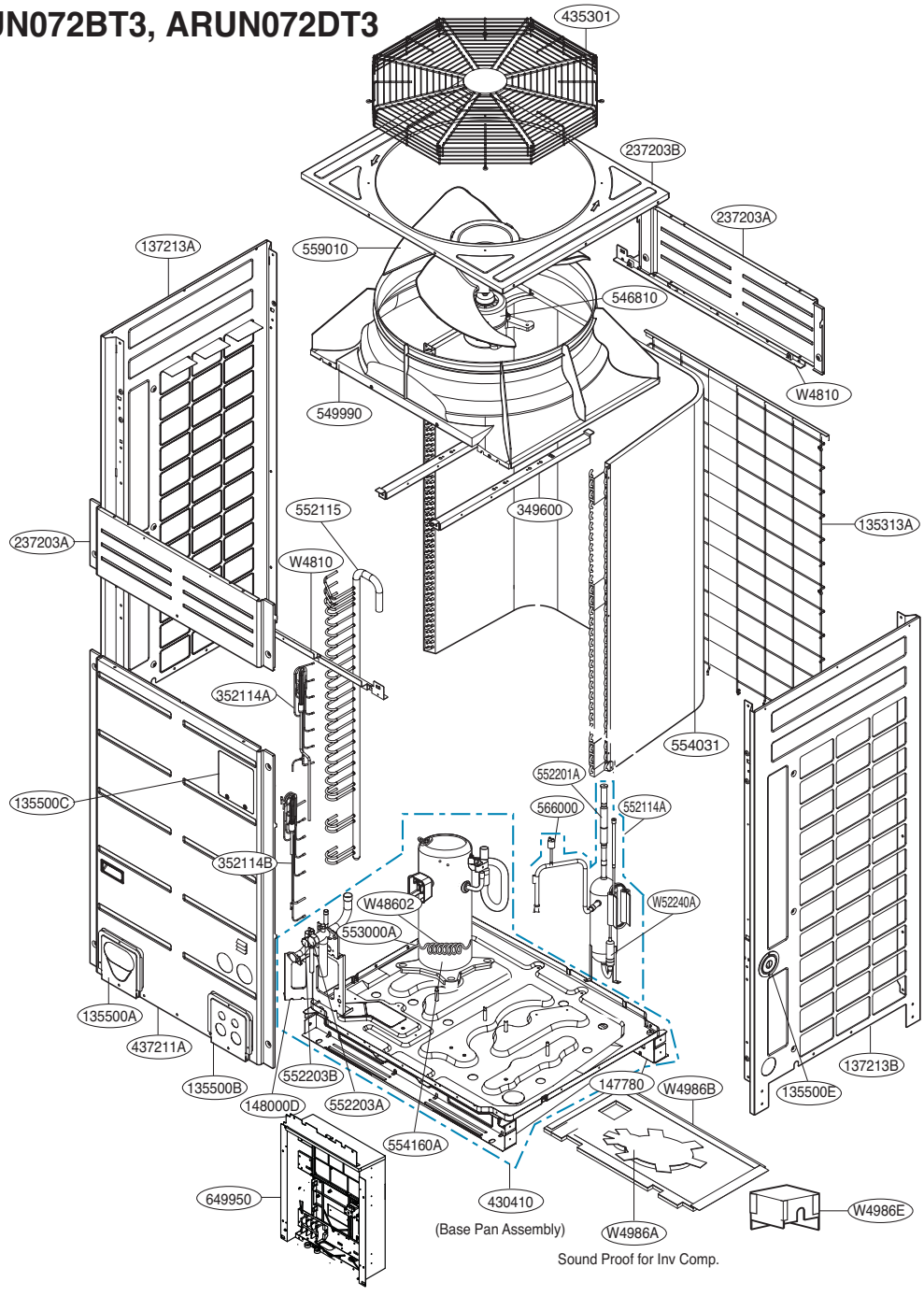

Part	L/No.	Remark
Inv Comp. Heater	553000A	Housing Color : Blue
Heater Spring	W48602	-
Low HEX3 Temp. Sensor	263230C	Housing Color : Black

■ ARUN072BT3 (3Ø, 208/230V)

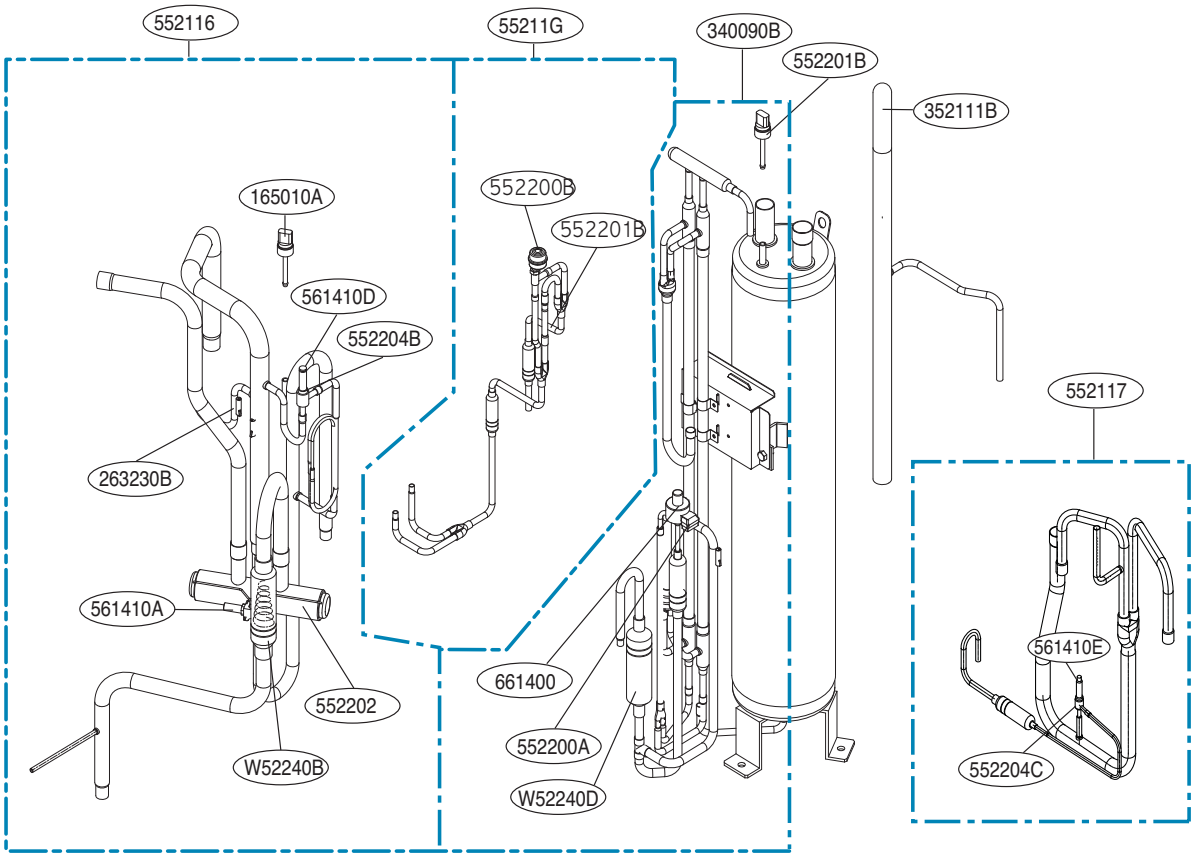

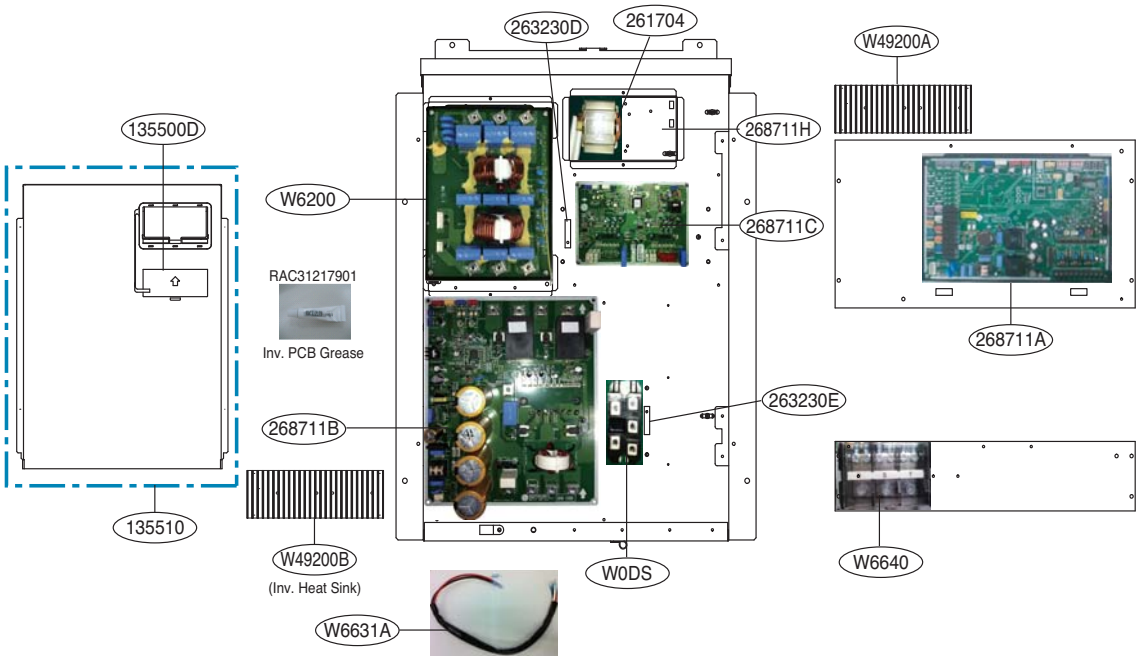

Part	L/No.	Sensor location	Remark
Temp. Sensor 1	263230A	Sub Cool Out + HEX2(Upper Temp. Sensor) + Liquid Pipe	Housing Color : Yellow
Temp. Sensor 2	263230B	Suction Pipe + HEX1(Temp. Sensor) + Inv. Discharge	Housing Color : Purple
Temp. Sensor 3	263230E	Air + Inv. IPM	Housing Color : Green

■ ARUN072BT3 (3Φ, 460V)

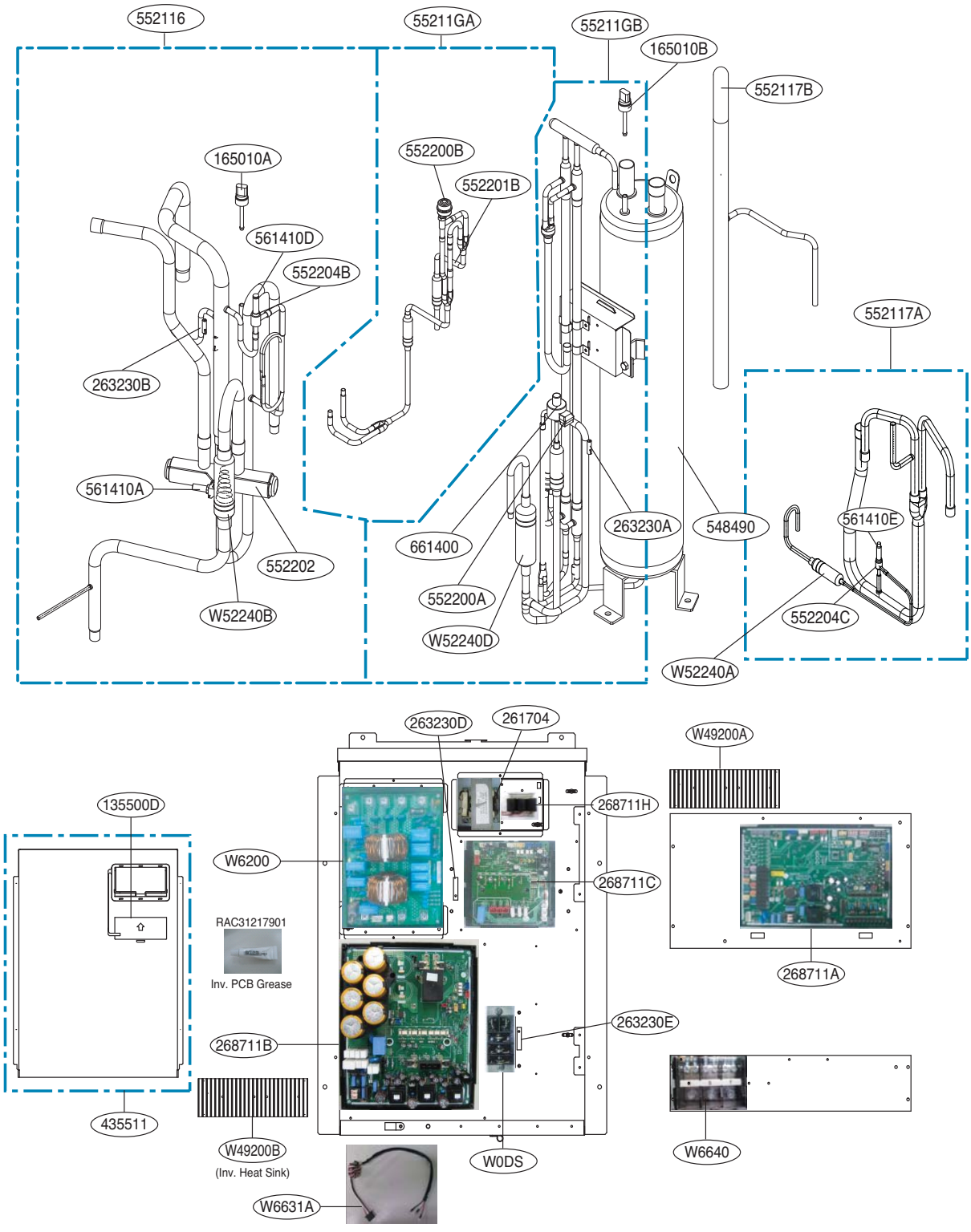

6.1.2 ARUN096BT3, ARUN121BT3, ARUN144BT3, ARUN096DT3, ARUN121DT3, ARUN144DT3

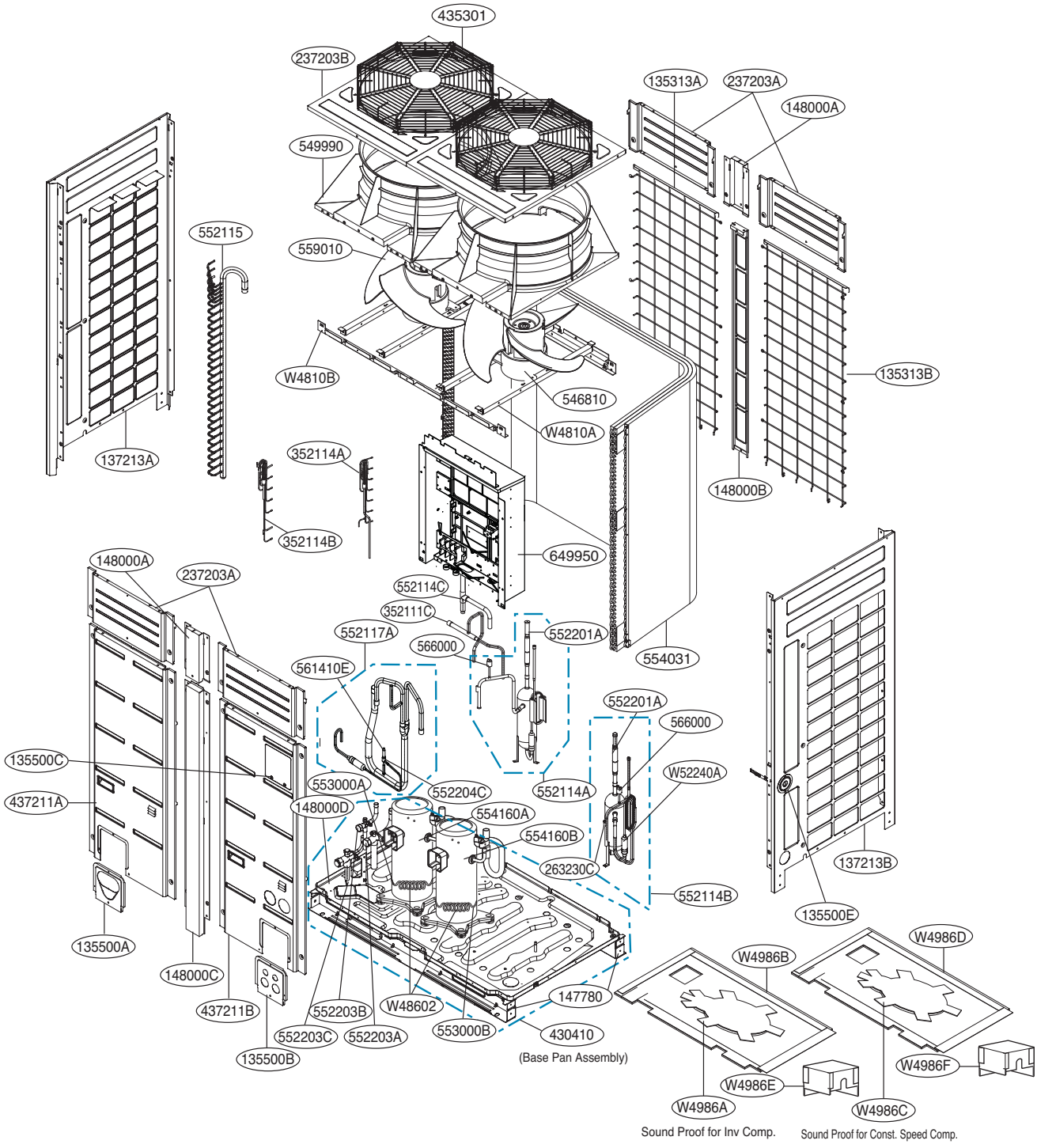

Part	L/No.	Remark
Inv Comp. Heater	553000A	Housing Color : Blue
Const. Speed Comp. Heater	553000B	Housing Color : Yellow
Heater Spring	W48602	-
Const. Speed Comp. Discharge + Low HEX3 Temp. Sensor	263230C	Housing Color : Black

■ ARUN096BT3, ARUN121BT3, ARUN144BT3 (3Φ, 208/230V)

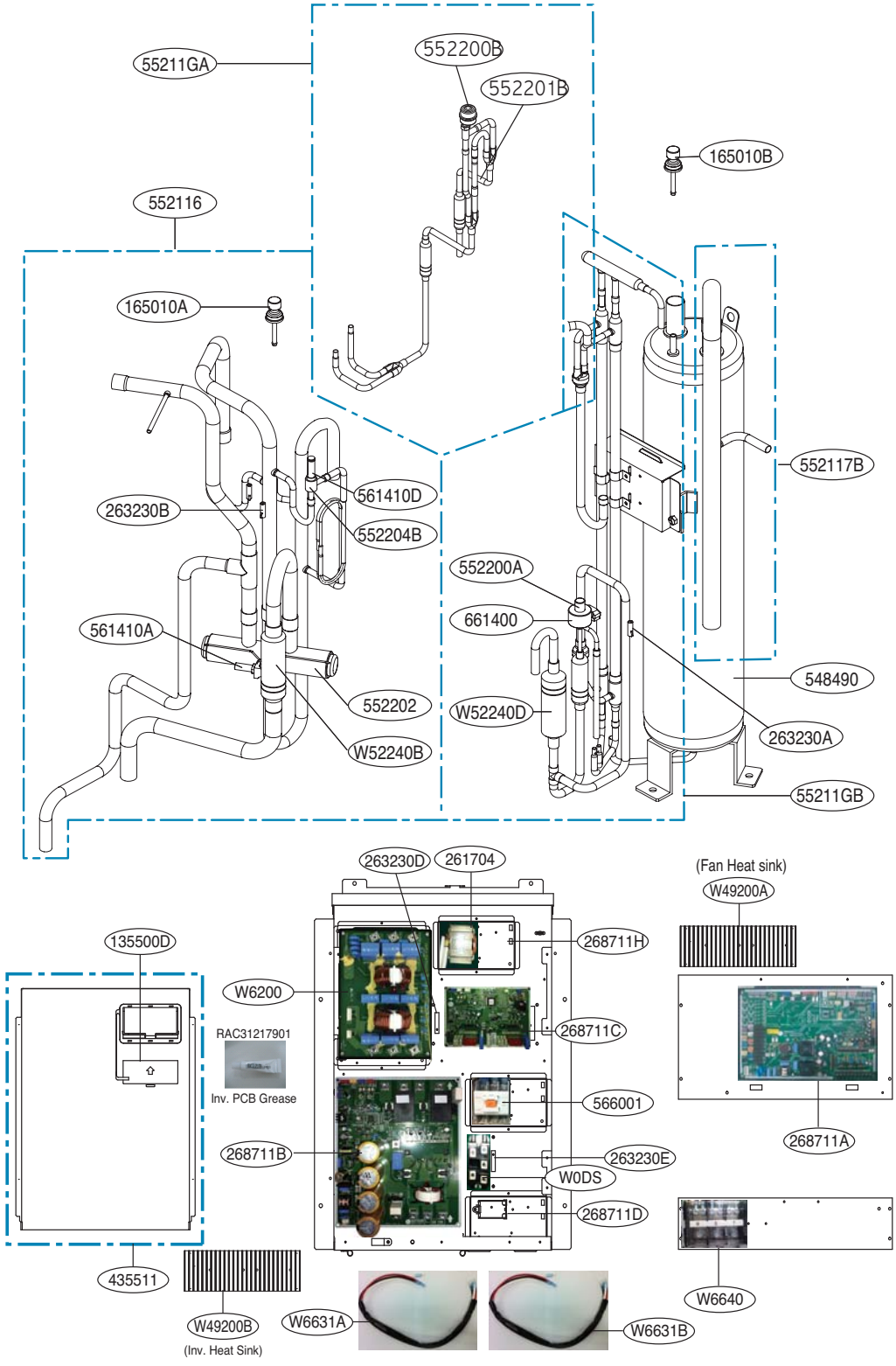

Part	L/No.	Sensor location	Remark
Temp. Sensor 1	263230A	Sub Cool Out + HEX2(Upper Temp. Sensor) + Liquid Pipe	Housing Color : Yellow
Temp. Sensor 2	263230B	Suction Pipe + HEX1(Temp. Sensor) + Inv. Discharge	Housing Color : Purple
Temp. Sensor 3	263230E	Air + Inv. IPM	Housing Color : Green

■ ARUN096DT3, ARUN121DT3, ARUN144DT3 (3Φ, 460V)

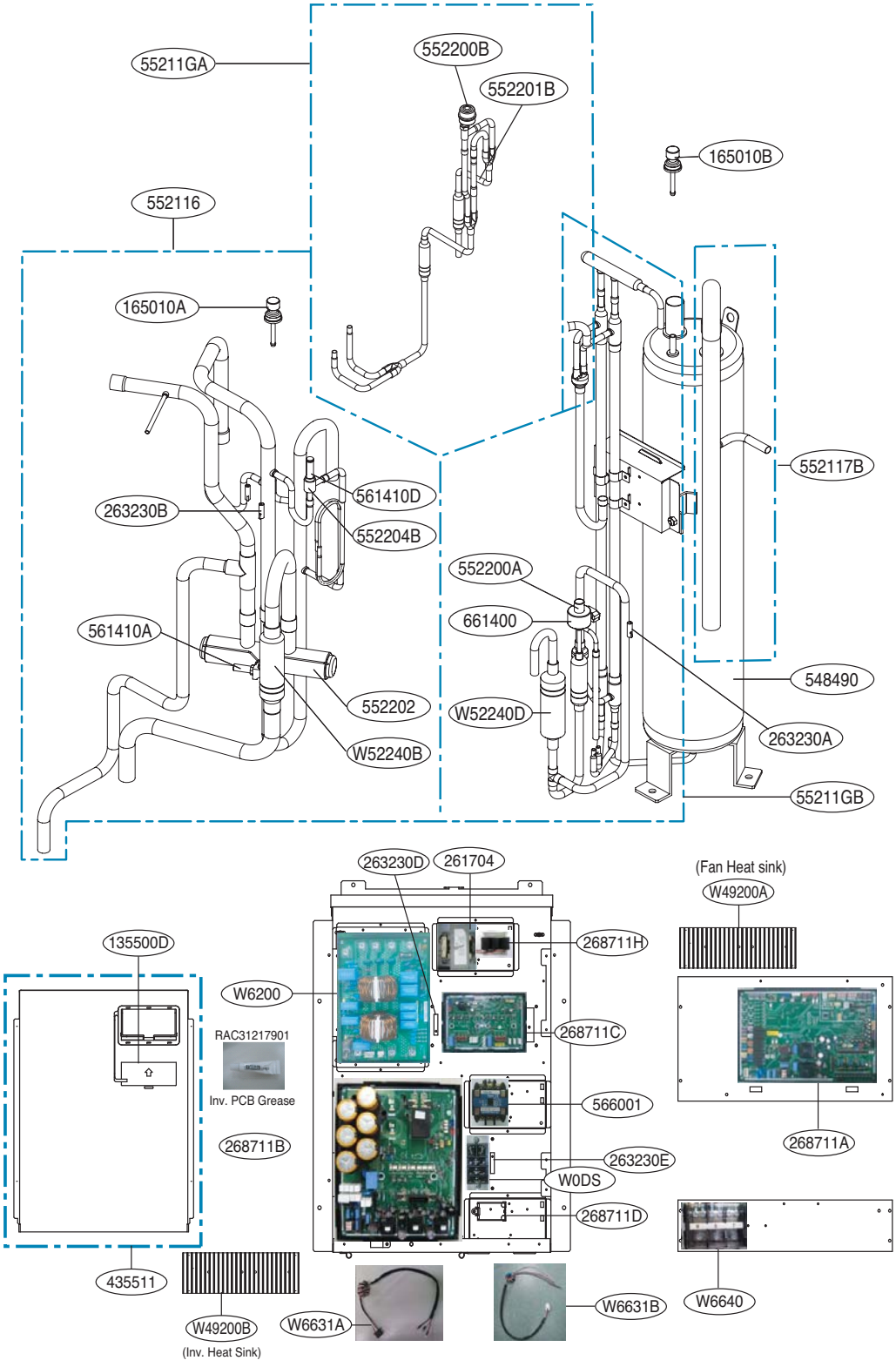

Part	L/No.	Sensor location	Remark
Temp. Sensor 1	263230A	Sub Cool Out + HEX2(Upper Temp. Sensor) + Liquid Pipe	Housing Color : Yellow
Temp. Sensor 2	263230B	Suction Pipe + HEX1(Temp. Sensor) + Inv. Discharge	Housing Color : Purple
Temp. Sensor 3	263230E	Air + Inv. IPM	Housing Color : Green

P/NO : MFL54555526

JUNE, 2011